# No 727481 RESERVE

# D3.8 v1.0

# WP3 Drafting of Ancillary Services and Network codes definitions V1

The research leading to these results has received funding from the European Union's Horizon 2020 Research and Innovation Programme, under Grant Agreement no 727481.

| | |
|---|---|
| **Project Name** | RESERVE |
| **Contractual Delivery Date:** | 30.09.2018 |
| **Actual Delivery Date:** | 29.09.2018 |
| **Contributors:** | UCD, RWTH, WIT |
| **Workpackage:** | WP3 – Voltage Stability by Design |
| **Security:** | PU |
| **Nature:** | R |
| **Version:** | 1.0 |
| **Total number of pages:** | 50 |

**Abstract:**

This deliverable presents the Drafting of Ancillary Services and Network codes definitions developed in WP3 of RESERVE project. The network codes are related to the active voltage management such as Distribution system – voltage control (SV_A), decentralized voltage control (SV_A, SV_B), requirements for new behaviour of RES inverters (SV_A, SV_B), Leading power factor (SV_A, SV_B), and dynamic stability margins (SV_B), and new requirements for the perturbations injected from RES inverters (SV_B). The ICT validations to the proposed NCs are explained. The trialled network codes as well as the related simulation activities are reported.

**Keyword list:**

Distribution Network Code, Ancillary Service, Reactive support, Voltage stability, Volt var curve, impedance measurement

# Executive Summary

The deliverable **D3.8** drafts the network code definitions (version 1) related to Task 3.7 within the wider context of WP3. A later and final second version of this deliverable will be labelled D3.9 (version 2). The main role of this deliverable is identifying a structure and key attributes through which all energy actors will integrate and communicate with a voltage and network control system in a secure resilient fashion and draft ancillary service and network code definitions based on these insights. This deliverable is dedicated to the network code requirements as well as the ICT validation of the SV_A and SV_B strategies.

The network code recommendation for DG control considering voltage control strategies are listed. The power factor requirements of different DER technologies are discussed and mathematically formulated. Additionally, the standard operating voltage conditions in different network codes are analysed. Finally, the concept of decentralised voltage control strategy using Volt-var curves is explained and discussed. The active voltage management using Volt-var optimization can be utilised as a powerful tool in futuristic distribution networks. The simulation results provided in chapter **2** show the effectiveness of the proposed methodologies (related to SV_B) in this chapter.

A set of 5 network codes are proposed covering various aspects of the scenario SV_A from both DSO perspective and from the perspective of the RES inverter. A change in the way DSOs operate and monitor the status of the grid is proposed. Furthermore, a 5G ICT driven decentralised control of RES inverters is proposed for the inverters. Offline simulations, real-time *HiL* simulations and field trials that are planned to validate the technical work is presented. Additionally, the mapping between these simulation and field trial experiments to the proposed network codes are elaborated. Few of the simulations are already completed and the results are presented in chapter **Fehler! Verweisquelle konnte nicht gefunden werden.** to demonstrate the validity of SV_A strategy. The remaining simulation and trials will be performed in last 12 months of the project.

The validation process for the decentralised control of RES inverters is explained in Chapter 4. This involves validating the reactive power values before they are sent to a RES inverter to ensure that it is kept within an approved range of values. There is another validation process to ensure that the inverters are reacting as expected, this can be applied to both a single inverter or to a group over networks on the same LV network.

The stability and control of future distribution networks with high share of inverter based RES would be achievable with the support of intelligent algorithms and high-performance, reliable, secure, and fast communications networks. These strategies should be reflected in network codes to pave the road for such a futuristic distribution network.

# Authors


| Partner | Name | e-mail |
|---|---|---|
| **UCD** | | |
| | Álireza Soroudi | Alireza.soroudi@ucd.ie |
| | Alireza Nouri | Alireza.nouri@ucd.ie |
| | Andrew Keane | Andrew.Keane@ucd.ie |
| **RWTH** | | |
| | Sriram Karthik Gurumurthy | Sgurumurthy@eonerc.rwth-aachen.de |
| | Antonello Monti | Amonti@eonerc.rwth-aachen.de |
| **WIT** | | |
| | David Ryan | dryran@tssg.org |
| | Miguel Ponce De Leon | miguelpdl@tssg.org |
| | Niall Grant | ngrant@tssg.org |

# Table of Contents

# 1. Introduction

## 1.1 Task 3.7

The deliverable D3.8 *Drafting of Ancillary Services and Network codes definitions, V1* marks the eighth technical document of WP3 of the RESERVE project. WP3 explores new concepts and theories surrounding steady state voltage regulation and dynamic voltage stability for distribution energy networks with 100% RES penetration. In the context of Task 3.7, the integration of any control mechanism will be totally contingent on interaction with all actors in the energy value chain. This task will identify a structure and key attributes through which all energy actors will integrate and communicate with a voltage and network control system in a secure resilient fashion and draft ancillary service and network code definitions based on these insights. This deliverable summarises the activities of Task 3.7 within the wider context of WP3.

## 1.2 Objectives of the Work Report in this Deliverable

- **O1.** To provide a list of recommendations on distribution network codes related to static voltage control and stability techniques (SV_B introduced in **D1.5**)
- **O2.** To provide a list of recommendations on distribution network codes related to dynamic voltage control and stability techniques (SV_A introduced in **D1.5**)
- **O3.** To investigate the ICT requirements that should be reflected in network codes for implementing the voltage control and stability techniques proposed in WP3
- **O4.** To provide a valid simulation test-bed for developing and investigating the techniques,

## 1.3 O4. To provide a valid simulation test-bed for developing and investigating the Outline of the Deliverable

The deliverable details the network code recommendations stemmed from the research efforts completed in WP3 of the RESERVE project in developing the voltage control and stability concepts. The network code recommendations regarding the static and dynamic voltage control as well as the scientific background, simulation platforms, and validation on sample distribution networks are presented here. The simulation results are provided to support these recommendations.

## 1.4 How to read this document

The network codes related to two main scenarios of WP3 namely SV_A and SV_B are explained and drafted in D3.8 *Drafting of Ancillary Services and Network codes definitions, V1.* The requirements on communication for both the scenarios can be found in D1.3. It is recommended to the reader to peruse through the voltage scenarios in these documents. The output of D3.8 will be used as the input for **WP6** and **WP7**. Figure 1-1 shows the placement of this deliverable (**D3.8**) in the wider context of **WP3** as well as interlinked work packages of the RESERVE project:

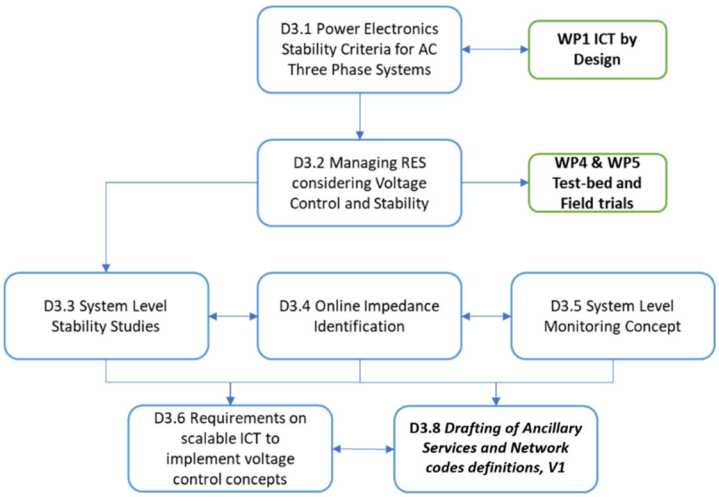


**Figure 1-1 Relations between Deliverables in WP3 and other work packages**

## 1.5 Approach used to undertake the Work

The following steps were applied to develop the results reported in this deliverable.

- The foundation of the new approaches to voltage stability and control are expanded upon from **D3.2, D3.3, D3.4, D3.5** and **D3.6** to a simulation environment in **D3.8**.
- Mathematical modelling governs the performance of the Dynamic Voltage Stability Monitoring technique (to achieve **O2**) and the AVM technique (to achieve **O1**).
- The formulation of both techniques is put forward in this deliverable, expanding the application of inverter-based RES units to a case-study context (to achieve **O4**).
- Step-by-step methodologies are developed to outline the replicability of the approach to any distribution feeder context irrespective of the differing inverter-based RES technology.
- Case studies are performed to validate the techniques in using time-domain simulations and time-series power flow (to achieve **O3**).
- Conclusions are drawn based upon the performance of the voltage control techniques in the simulation environment.

# 2. Drafting Network code recommendation for DER control considering voltage control strategies (UCD)

The Network Codes (NC) in many jurisdictions place thresholds and mandatory requirements on the operational envelopes of connected devices including Distributed Energy Resources (DERs). Such requirements include thresholds for the Reactive Power performance of such devices. A number of Specific DER Technologies are subject to Power Factor Requirements including Wind Generators, Solar PV Generators and Storage. These are discussed in greater detail below.

## 2.1 Power factor requirements for DER technologies

The RPP shall be equipped with reactive power control functions capable of controlling the reactive power supplied by the RPP at the POC as well as a voltage control function capable of controlling the voltage at the POC via orders using set points and gradients for the specified parameters [6]. The reactive power requirements of DERs are different in different network codes. **Table** 2-1 provides a comparison between different network codes.

**Table 2-1 Reactive Power Requir7ements for DERs**

| Grid Code | Reactive requirement specified at | Reactive power range (pu) | Equivalent Power factor | Reference |
|---|---|---|---|---|
| Denmark | Grid Connection Point | -0.33 – 0.33 | 0.95 – 0.95 | [7] |
| Germany | Grid Connection Point (Transmission Code) | -0.33 – 0.33<br>-0.33 – 0.41<br>-0.41 – 0.33 | 0.95 – 0.95<br>0.905 – 0.925<br>0.925 – 0.95 | [8] |
| UK | Grid entry point | | 0.95 – 0.95 | [9] |
| Ireland | LV side of grid transformer | -0.39 – -0.31 | 0.92 – 0.95 | [10] |

In this section the power factor requirements of different inverter based DER will be discussed.

### 2.1.1 Power factor requirements for Wind technology

There are some general issues regarding the reactive power capability of wind technology as follows:

- The requirements for synchronous machines are specified at the machine terminals
- The relationship between machine capability and capability at the interface point will vary from one installation to another.
- The design implications of different reactive capability requirements are not certain, and will vary between installations, technologies, manufacturers etc.
- The utilisation of the full reactive power capability of a generator located in a weak part of the network may result in unacceptably high voltages near the generator site without impacting significantly on the grid voltage, therefore resulting in unusable reactive capability due to the characteristics of the local network
- Synchronous machines are dynamic reactive power sources, and thus contribute to voltage regulation and voltage stability. Wind farms may depend on static devices (such as capacitors which in addition have voltage squared output dependence) and thus may not deliver the same performance even if they have the same nominal capacity.
- Synchronous machines have an inherent reactive power capability, controlled by excitation control. Over-excitation, delivering capacitive reactive power to the system is normally limited by either exciter current limits or stator current limits. Under-excitation, delivering inductive reactive power, is normally limited by stability considerations. In integrated utilities, the reactive capabilities of individual machines were normally a matter for negotiation internally. Greater capacitive capability could normally be achieved at some cost increase due to the greater alternator and exciter ratings required. On the other

hand turbine improvements leading to increased output could lead to reduced reactive capability if the alternator rating was not also increased.

The Irish Distribution Code specifies power factor requirements for Wind technology with less than 5 MW capacity, these are shown in Figure 2-1 [10].

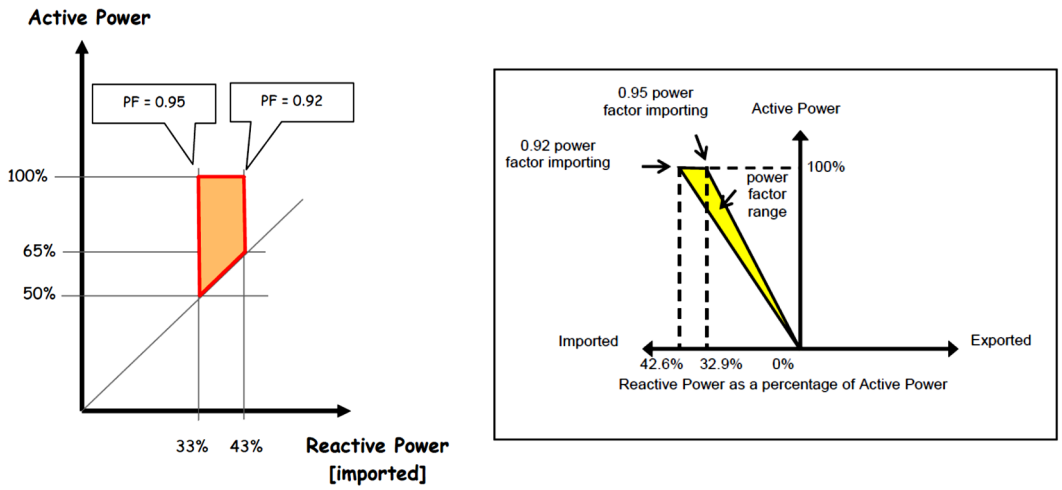


**Figure 2-1 PF requirements for wind technology with less than 5 MW capacity**

As can be observed in Figure 2-1, the wind technology is not allowed to inject reactive power to the grid (only lagging power factor is allowed). In general, the reactive power output of inverter based wind technology is limited by several factors which will be discussed here:

- Case a) Reactive power provision for wind technology without considering the thermal limits of the inverter is schematically shown in Figure 2-2. In this figure, every point shows a mathematically simulated operating point (just for demonstration purpose). In this case, the wind turbine can provide reactive power upto the maximum of its reactive capacity without considering its active power.

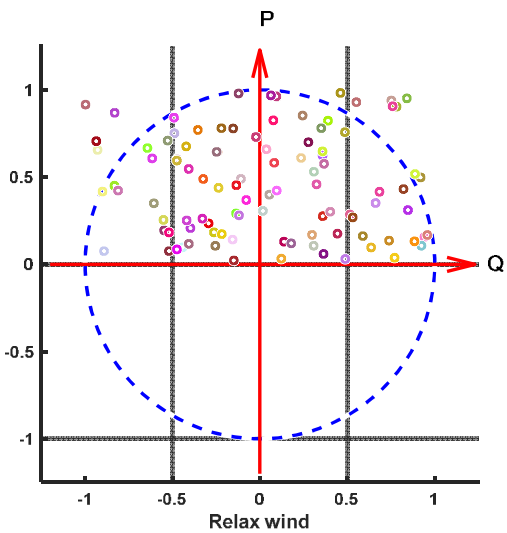


**Figure 2-2 Reactive power capability for wind without considering the thermal limits of inverter**

The reactive power of the wind in case a) is constrained as given in (2-1):

$$-Q_{wind}^{max} \leq Q_{wind} \leq Q_{wind}^{max} \quad (2\text{-}1)$$

- Case b) Reactive power provision for wind technology with considering the thermal limits of the inverter see Figure 2-3. In this case, wind turbine can provide the reactive upto maximum of it reactive capacity but the reactive power limit is calculated considering the active power output of the wind turbine/

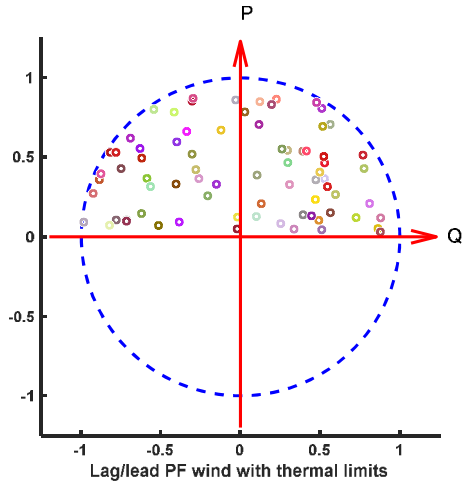


**Figure 2-3 Reactive power capability for wind considering the thermal limits of inverter**

The reactive power of the wind in case b) is constrained as given in (2-2):

$$-Q_{wind}^{max} \leq Q_{wind} \leq Q_{wind}^{max}$$
$$\sqrt{Q_{wind}^2 + P_{wind}^2} \leq S_{wind}^{max} \quad (2\text{-}2)$$

- Case c) The wind turbine ins limited to provide lagging reactive power only see Figure 2-4. In this case, the wind turbine is not allowed to provide leading reactive power. In other words, the wind turbine is not allowed to inject reactive power to the grid. This is done to prevent the voltage rise in the distribution network.

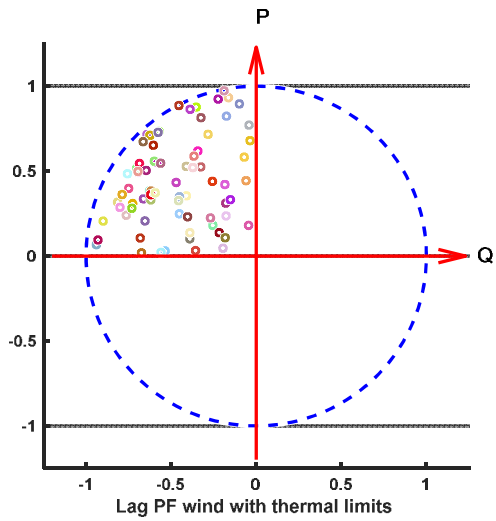


**Figure 2-4 Lagging reactive power capability for wind considering the thermal limits of inverter**

The reactive power of the wind in case c) is constrained as given in (2-3):

$$-Q_{wind}^{max} \leq Q_{wind} \leq Q_{wind}^{max}$$
$$\sqrt{Q_{wind}^2 + P_{wind}^2} \leq S_{wind}^{max} \quad (2\text{-}3)$$

$$-Q_{wind}^{max} \leq Q_{wind} \leq 0$$

- Case d) the Irish Distribution Code's requirements for reactive power provision by wind technology see Figure 2-5. In this case, the wind turbine is only allowed to provid lagging power factor (absorb reactive power) but within the specified limits as shown in Figure 2-1.

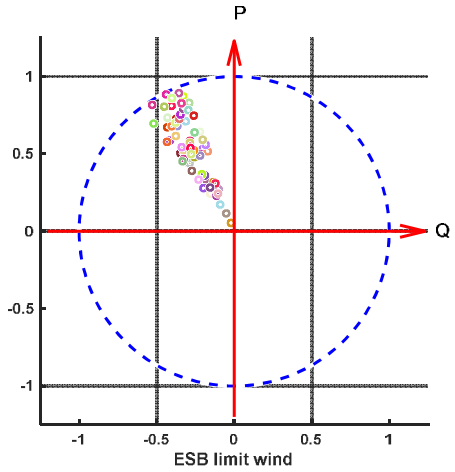


**Figure 2-5 Reactive power capability for wind considering the Distribution Code's requirements**

The reactive power of the wind in case d) is constrained as given in (2-4):

$$\begin{gathered} -Q_{wind}^{max} \leq Q_{wind} \leq Q_{wind}^{max} \\ \sqrt{Q_{wind}^2 + P_{wind}^2} \leq S_{wind}^{max} \\ -Q_{wind}^{max} \leq Q_{wind} \leq 0 \\ 0.92 \text{ lag} \leq PF_{wind} \leq 0.95 \text{ lag} \end{gathered} \tag{2-4}$$

- Case e) The proposed reactive power provision of wind technology is shown in Figure 2-6. In this case, the wind turbine is required to provide both lagginga and leading power factor within the specified limits which are 0.92 lagging/leading.

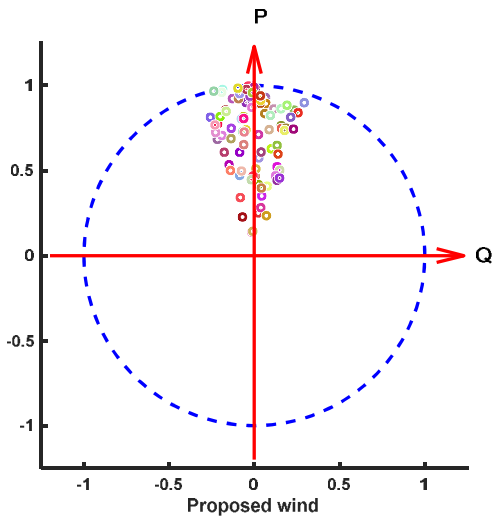


**Figure 2-6 Proposed reactive power capability for wind**

The reactive power of the wind in case e) is constrained as given in (2-5):

$$-Q_{wind}^{max} \leq Q_{wind} \leq Q_{wind}^{max}$$
$$\sqrt{Q_{wind}^2 + P_{wind}^2} \leq S_{wind}^{max} \quad (2\text{-}5)$$
$$0.92 \text{ lag} \leq PF_{wind} \leq 0.92 \text{ lead}$$

Allowing the wind turbines to have a more flexible range of operation has the following pros and cons:

Pros:

- The capability to inject reactive power to the grid for increasing the voltage level in high demand period
- Some wind technologies can provide reactive power to the grid even at no-wind conditions
- It can reduce the loading of the transformer connecting LV to MV
- Improve the security of supply
- It can delay the need for distribution network development plans

Cons

- The reactive power injection can cause overvoltage issues in low load periods
- Considering the thermal limits of inverter, the active power output of the wind will be more limited
- Allowing leading reactive power support by wind turbines requires more coordination between different flexibilities and resources

### 2.1.2 Power factor requirements for PV technology

Case a) Reactive power provision for PV technology without considering the thermal limits of the inverter see Figure 2-7.a. In this case, PV can provide the reactive up to the maximum of it reactive capacity without considering its active power. The reactive power of the PV in case a) is constrained as given in (2-6):

$$-Q_{pv}^{max} \leq Q_{pv} \leq Q_{pv}^{max} \quad (2\text{-}6)$$

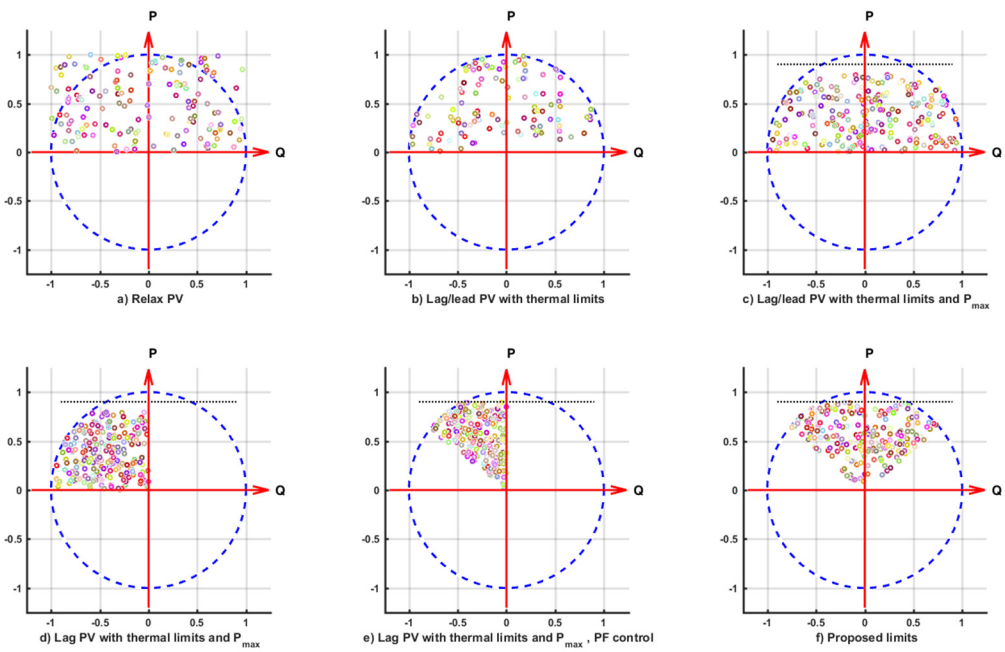


**Figure 2-7 Reactive power capability for PV technology**

Case b) An inverter attached to a PV generator is not an infinite source or sink of reactive power. Its instantaneous reactive power capability is limited by its fixed apparent power capability s and the variable real power generation p as depicted in Figure 2-7.b In this case, PV can provide the reactive up to the maximum of it reactive capacity without considering its active power. The reactive power of the PV in case b) is constrained as given in (2-7):

$$\begin{gathered} -Q_{pv}^{max} \leq Q_{pv} \leq Q_{pv}^{max} \\ \sqrt{Q_{pv}^2 + P_{pv}^2} \leq S_{pv}^{max} \end{gathered} \tag{2-7}$$

Case c) The PV unit should be operated at an active power output below the rated capacity of the PV. The Solar Plant shall be able to be operated in every possible operating point in the P-Q Diagram for each solar plant size as shown in Figure 2-7.c [12]. The reactive power of the PV in case c) is constrained as given in (2-8):

$$\begin{gathered} -Q_{pv}^{max} \leq Q_{pv} \leq Q_{pv}^{max} \\ \sqrt{Q_{pv}^2 + P_{pv}^2} \leq S_{pv}^{max} \\ P_{pv} \leq 0.9 S_{pv}^{max} \end{gathered} \tag{2-8}$$

Case d) In some network codes, the PV units are only allowed to provide lagging power factor (absorbing reactive power) see Figure 2-7.d. The reactive power of the PV in case d) is constrained as given in (2-9):

$$\begin{gathered} -Q_{pv}^{max} \leq Q_{pv} \leq Q_{pv}^{max} \\ \sqrt{Q_{pv}^2 + P_{pv}^2} \leq S_{pv}^{max} \\ -Q_{pv}^{max} \leq Q_{pv} \leq 0 \\ 0 \leq P_{pv} \leq 0.9 S_{pv}^{max} \end{gathered} \tag{2-9}$$

Case e) In some network codes, there are extra constraints on PF that a PV unit can provide see Figure 2-7.e. The reactive power of the PV in in this case is constrained as given in (2-10):

$$\begin{gathered} -Q_{pv}^{max} \leq Q_{pv} \leq Q_{pv}^{max} \\ \sqrt{Q_{pv}^2 + P_{pv}^2} \leq S_{pv}^{max} \\ -Q_{pv}^{max} \leq Q_{pv} \leq 0 \\ 0 \leq P_{pv} \leq 0.9 S_{pv}^{max} \\ 0.92 \text{ lag} \leq PF_{pv} \leq 1 \end{gathered} \tag{2-10}$$

Case f) The proposed reactive power capability curve for PV technology is shown in Figure 2-7.f. The PV unit must be able to control reactive power at the Grid Connection Point in a range of 0.92 lagging to 0.92 leading at maximum active power and according to (2-11) inspired by [13]:

$$\begin{gathered} -Q_{pv}^{max} \leq Q_{pv} \leq Q_{pv}^{max} \\ \sqrt{Q_{pv}^2 + P_{pv}^2} \leq S_{pv}^{max} \\ -Q_{pv}^{max} \leq Q_{pv} \leq 0 \end{gathered} \tag{2-11}$$

$$0 \leq P_{pv} \leq 0.9S_{pv}^{max}$$

$$0.92 \text{ lag} \leq PF_{pv} \leq 0.92 \text{ lead}$$

### 2.1.3 Power factor requirements for electric storage systems

The electric energy storage technologies like batteries and V2G can not only inject active power but also they can absorb active power. This is unlike PV and wind technology behaviour in which they can just inject active power to the grid. The reactive power output of an inverter based storage technology is limited by several technical factors which will be discussed here.

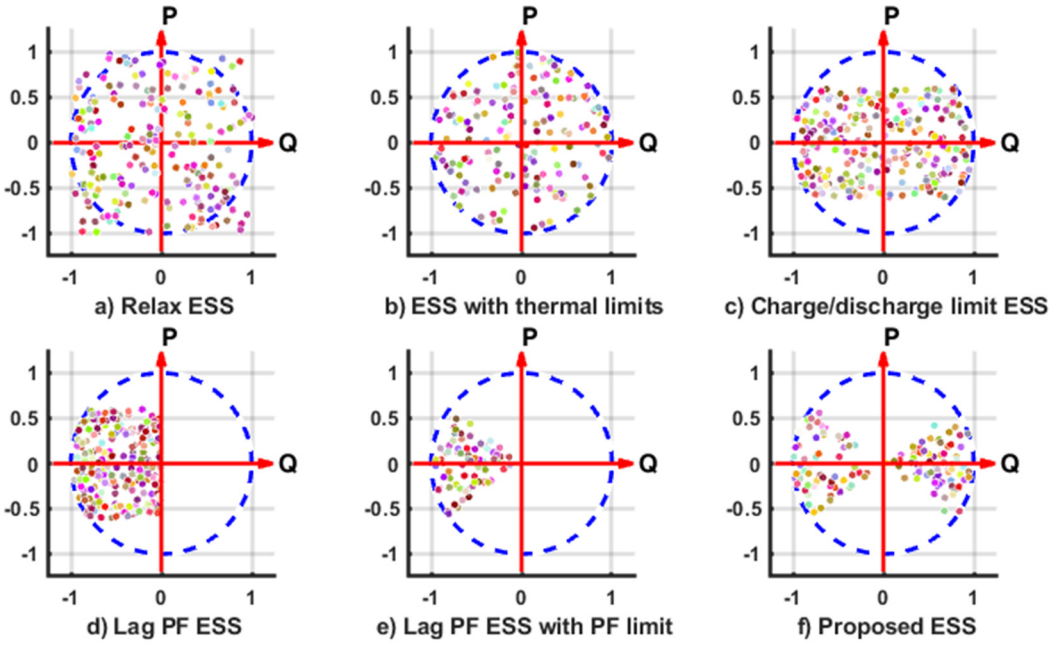


**Figure 2-8 Reactive power capability for electric energy storage technologies**

Case a) In this case, the ESS can provide reactive/reactive power up to its inverter capacity. The active power also changes within its max range. The reactive power capability curve is shown in Figure 2-8.a. The reactive power of the ESS in this case is constrained as given in (2-12):

$$\begin{aligned} -Q_{ESS}^{max} \leq Q_{ESS} \leq Q_{ESS}^{max} \\ -S_{ESS}^{max} \leq P_{ESS} \leq S_{ESS}^{max} \end{aligned} \tag{2-12}$$

Case b) In this case, an additional constraint is added which is the thermal capacity of the unit. The resulting reactive power capability curve for ESS is shown in Figure 2-8.b. The reactive power of the ESS in this case is constrained as given in (2-13):

$$\begin{aligned} -Q_{ESS}^{max} \leq Q_{ESS} \leq Q_{ESS}^{max} \\ -S_{ESS}^{max} \leq P_{ESS} \leq S_{ESS}^{max} \\ \sqrt{Q_{ESS}^2 + P_{ESS}^2} \leq S_{ESS}^{max} \end{aligned} \tag{2-13}$$

Case c) In this case, the charging and discharging limits are taken into account. The resulting reactive power capability curve for ESS is shown in Figure 2-8.c. The reactive power of the ESS in this case is constrained as given in (2-14):

$$\begin{aligned} -Q_{ESS}^{max} \leq Q_{ESS} \leq +Q_{ESS}^{max} \\ -P_{ESS}^{max} \leq P_{ESS} \leq P_{ESS}^{max} \end{aligned} \tag{2-14}$$

$$\sqrt{Q_{ESS}^2 + P_{ESS}^2} \leq S_{ESS}^{max}$$

Case d) In this case, the constraints are similar to case c but the reactive power is limited to the lagging PF. The resulting reactive power capability curve for ESS is shown in Figure 2-8.d according to (**2-15**):

$$\begin{gathered} -Q_{ESS}^{max} \leq Q_{ESS} \leq 0 \\ -P_{ESS}^{max} \leq P_{ESS} \leq P_{ESS}^{max} \\ \sqrt{Q_{ESS}^2 + P_{ESS}^2} \leq S_{ESS}^{max} \end{gathered} \tag{2-15}$$

Case e) In this case, an additional constraint is added which is controlling the reactive power within a specific range. The resulting reactive power capability curve for ESS is shown in Figure 2-8.e. The ESS must be able to control reactive power at the Grid Connection Point in a range of 0.92 lagging to unity PF according to (2-16):

$$\begin{gathered} -Q_{ESS}^{max} \leq Q_{ESS} \leq 0 \\ -P_{ESS}^{max} \leq P_{ESS} \leq P_{ESS}^{max} \\ \sqrt{Q_{ESS}^2 + P_{ESS}^2} \leq S_{ESS}^{max} \\ 0.92\text{lag} \leq PF_{ESS} \leq 0.92 \text{ lead} \end{gathered} \tag{2-16}$$

Case f) The proposed reactive power curve for ESS is shown in Figure 2-8.f. The ESS must be able to control reactive power at the Grid Connection Point in a range of 0.92 lagging to 0.92 leading according to (2-17) [14]:

$$\begin{gathered} -Q_{ESS}^{max} \leq Q_{ESS} \leq +Q_{ESS}^{max} \\ -P_{ESS}^{max} \leq P_{ESS} \leq P_{ESS}^{max} \\ \sqrt{Q_{ESS}^2 + P_{ESS}^2} \leq S_{ESS}^{max} \\ 0.92\text{lag} \leq PF_{ESS} \leq 0.92 \text{ lead} \end{gathered} \tag{2-17}$$

## 2.2 Voltage Control and operating conditions in the presence of DERs

The calculated voltage rise due to the DER's connection must not cause voltage outside the permitted limits. The nominal voltages at distribution systems are given in Table 2-2.

**Table 2-2 Distribution nominal voltages (Irish System)**

| Level | Voltage range |
|---|---|
| Low voltage (LV) | 230V – phase to neutral<br>400V – phase to neutral |
| Medium voltage (LV) | 10 kV<br>20 kV |
| High voltage (LV) | 38 kV<br>110 kV |

The DSO should operate the distribution system in a way that the voltage at the supply terminal as defined in EN 50160 [15], complies with that standard. The voltage range tolerance shall be 230V ±10%. The resulting voltage at different points on the system depends on several factors but at the connection point can be expected to be in accordance with Table 2-3 under steady state and normal operating conditions [10].

Table 2-3 Operating voltage range

| Nominal voltage | Maximum voltage | Minimum voltage |
|---|---|---|
| 230 V | 253 V | 207 |
| 400 V | 440 V | 360 |
| 10 kV | 11.1 kV | Variable according to operating condition |
| 20 kV | 22.1 kV | |
| 38 kV | 43 kV | |
| 110 kV | 120 kV | |

The voltage regulation control will follow the requirements presented by [16] which is shown in Figure 2-9.

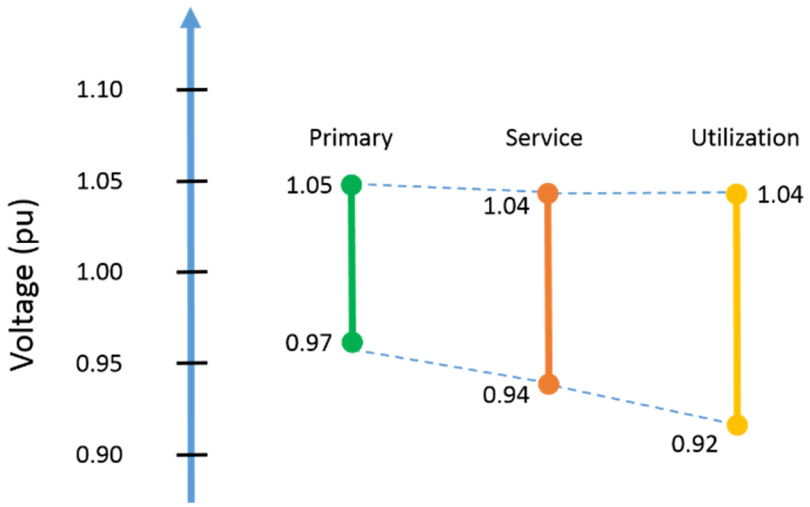


**Figure 2-9 Voltage regulation control requirements**

The primary voltage refers to the voltage at the point of primary side of the step down transformer at the customer side. The service voltage means the voltage at the customer's meter, or the load side of the PCC. The utilization voltage refers to the voltage at the point of use where the outlet equipment is plugged in.

## 2.2.1 Voltage rise (Existing):

### 2.2.1.1 Steady-state voltage rise criteria (Available in the current Irish NC)

The connection of embedded generators to the distribution network may impact on the DSO's ability to regulate network voltages. For this reason, DSO requires embedded generating systems to control reactive power output, within their capability, to maintain the point of connection voltage to an agreed target or operate at an agreed power factor such that voltage variations are maintained within prescribed limits. The DSOs shall be able to monitor both active and reactive power generation by the RPPs at POC point of connection [6].

The overvoltage is one of the main reasons for limiting the capacity (active power) of non-dispatchable DG, such as PV, that can be connected to a low voltage (LV) distribution system. During high PV generation and low load periods, there is a possibility of reverse power flow, and consequently voltage rise, in the LV feeder. In general, to address overvoltage issues one can:

- Reduce the secondary LV transformer voltage adjusting the tap;
- Allow the DGs to absorb reactive power
- Install auto-transformers/voltage regulators;
- Increase the conductors size, reducing line impedances
- Store the power surplus for later use
- Curtail the power of DG units.

The voltage rise due to distributed generators must not exceed +2% (MV) and +3% (LV) of the nominal system voltage [13].

#### 2.2.1.2 Active power control

The DER system must be capable of reducing its active power output in cases of danger for a proper system operation. These cases include the following:

- Potential congestions and equipment overloading,
- Imminent danger of islanding operation,
- Endangerment for static or dynamic system stability,
- Over frequency
- Maintenance work.

Other rules used for design of connection and potential network reinforcement are [17]:

- if not available, the minimal load on the feeder is considered at 20% of the peak load.
- if not available the tan φ of the consumers on the feeder is considered to be 0.4.
- in LV, a maximum gradient of 2% of the voltage for 1 kW of additional load or generation is allowed at a given point.
- in LV, 1.5% of voltage loss is considered in the connection (between the DER and the connection point on the network).

The MV voltage planning uses the adjustability of the reference voltage at the secondary of the HV/MV transformer. It is based on the voltage profile of MV feeders connected to the same HV/MV transformer.

The majority of distribution networks bulk substation transformers are fitted with OLTC facilities and will automatically act to restore network voltage levels within minutes [6].

The MV voltage is maintained utilising the tap changers flexibility in the HV/MV substation and dynamically adapt tap position in a range usually of about [±15%] around the nominal setting.

LV voltage adjustment also uses tap changers of transformers MV/LV. The position of the tap changers can be changed manually with three settings (+0%, +2.5%, +5% against the nominal setting) [17].

In addition, Line Drop Compensation (LDC) controls may also be used to regulate the network voltage at a location downstream of the bulk substation. These controls are commonly used to regulate network voltages and maximise transfer capacity to customers.

The inverter must disconnect within 3 seconds when the average voltage for a 10 minute period exceeds the maximum nominal operating voltage [6].

### 2.2.2 Voltage control requirements in grid codes (Existing)

The voltage control requirements are expressed in a variety of ways in grid codes. The issues specified can include:

- The ability to receive a set point (which may be local or remote)
- Range of set points
- Droop settings
- Time to change a set point
- Transient response to step changes

The requirements in various grid codes are summarised in Table 2-4, and are discussed in further detail below.

The UK Grid Code requires continuous steady state control of voltage at the grid entry point. The controller must be capable of the following

- The slope must be adjustable over a range of 2% to 7%.
- Deviations from set point to be corrected within 5s.
- The time to implement a new set point or slope does not appear to be stated.

- The response to a step change to commence within 0.2s, with 90% of the plant capability to be produced within 1s.
- The settling time must be less than 2s, with peak to peak reactive power oscillations no more than 5% by that time.

The Irish Grid Code is similar albeit less specific. It requires a similar response to that of a synchronous generator's automatic voltage regulator. The voltage set point is at the HV side of the interface transformer, which is normally also the connection point. The slope must be adjustable over a range of 2% to 10%. A change to the voltage set point must be capable of being received automatically and of being implemented within 20s. 90% of the steady state response to a step change in set point or voltage must be achieved within 1s.

**Table 2-4 Voltage control requirements**

| Grid Code | Reactive requirement specified at | Specified set point | Droop setting | Transient response | Set point changes | Reference |
|---|---|---|---|---|---|---|
| Denmark | Reactive Power Control Power Factor Control Voltage Control (> 25 MW) | | Required | | 10s | [7] |
| Germany | Reactive Power Control Power Factor Control Voltage Control | | | Immediate | 1 min | [8] |
| UK | | 95%-105% | 2%-7% | 90% within 1s | | [9] |
| Ireland | Voltage regulation similar to AVR | HV side of grid transformer | 1%-10% | 90% within 1s | 20 s | [10] |

In Denmark, Germany and Spain there is provision for power factor control, reactive power control or voltage control. The German Transmission Code states only that the generator voltage control must take immediate action in the case of voltage changes. A new set point must be implemented within 1 minute. In Denmark, set point changes must be implanted within 10s. There is provision for a droop setting. In Spain, the slope can range between 0 and 25 (Mvar p.u. / Voltage deviation p.u.); the entire response to a change must be achieved within 1 minute.

Alberta requires a continuously-variable, continuously-acting, closed loop control voltage regulation system. The set point can range from 95% to 105%, and the droop 0-10%. Reactive current compensation may be required. 95% of the response to a step change must be achieved between 0.1s to 1s after change. Québec also requires a droop setting between 0 and 10%. The Onshore Non-Synchronous Generating Unit shall provide continuous steady state control of the voltage at the Onshore Grid Entry Point with a Set point Voltage and Slope characteristic as illustrated in Figure 2-10 [9].

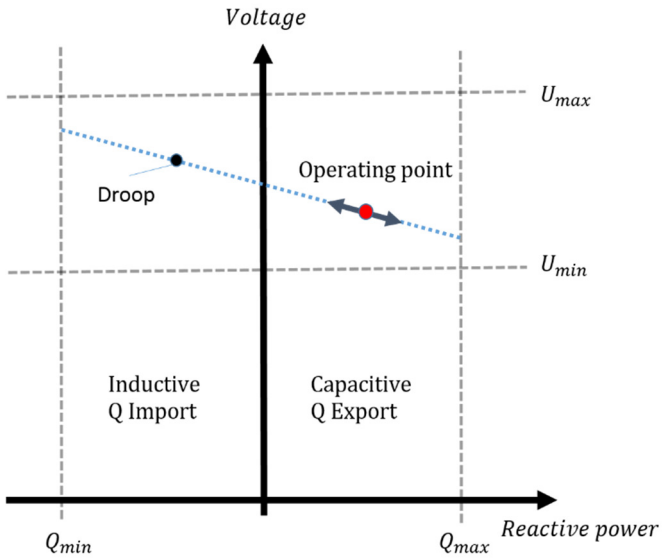


**Figure 2-10 Setpoint Voltage and Slope characteristic**

## 2.3 Volt-var curve based reactive power control (proposed)

The active voltage management of LV distribution network can use different flexibilities such as capacitor switching [18], demand response [19] and reactive power management of inverter based DERs [20]. The idea of using vol-var capability of inverter-based RES was described in **D3.2.** The Volt-var curve active voltage management (AVM) concept is successfully put to trial in **WP5**.

### 2.3.1 Active voltage management

The AVM technique is a decentralised approach to voltage control for maintaining steady state voltage in the presence of RES. The technique capitalises on the inverter-based RES units by engaging with the provision of reactive power from these units.

The AVM technique consists of a multi-scenario three-phase AC OPF analysis of RES connections on LV feeders. An offline network analysis takes place, which is a centralised solution that determines:

- an optimal voltage set-point for each point of RES connection
- the range of expected voltages anticipated at the point of connection
- the spread of reactive power set-points that would render the RES connection capable of achieving the voltage target
- objective governed Volt-var curves for online decentral deployment

The output of this **offline** network analysis is a prescribed Volt-var curve per RES connection determined while fulfilling a single objective of the network operator. The procedure can be repeated to satisfy any objective of the DSO that can be formulated within feasible conditions of an AC OPF. In the field, and in further time-series simulation, these Volt-var curves dictate the voltage control at each point of connection of a RES by utilising the inverter capabilities. The only required input for corrective action to take place is the voltage magnitude measurement local to the RES unit. The input-output procedure of Volt-var curves is depicted in Figure 2-11.

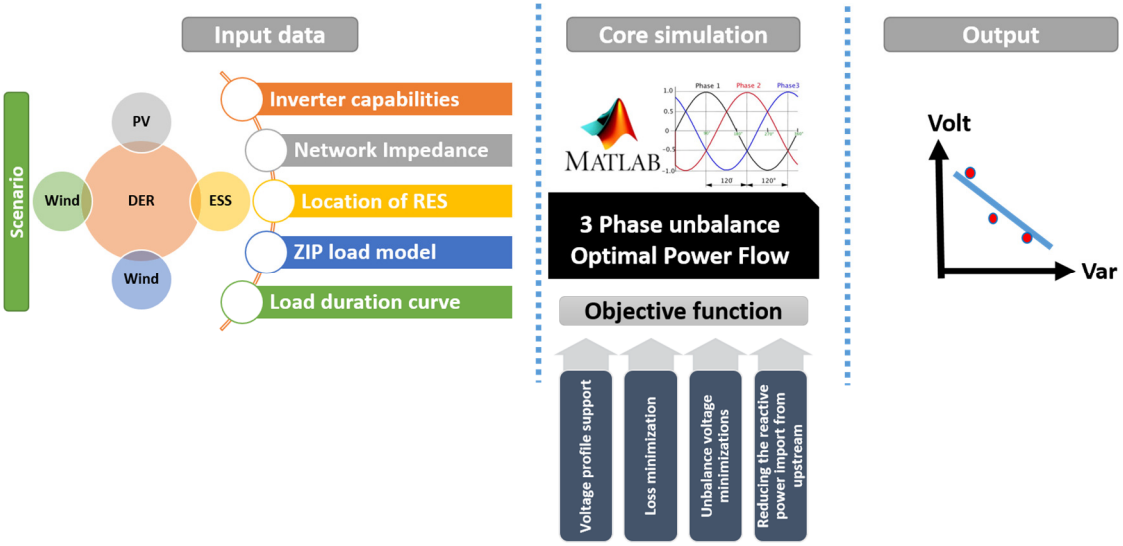


**Figure 2-11 Input-Output of Volt-var curve determination procedure**

The network topology, impedance information and the active and reactive power settings of demand customers and scenarios of RES alike are constituting the input data for Volt-var determination. This data is fed into a three phase unbalanced OPF and the optimal VVCs are found based on the selected objective function. The possible objective functions are:

- Active power loss minimization
- Voltage unbalance minimization in three phase networks
- Voltage profile improvement
- Minimizing the need for importing the reactive power from upstream network

The centralised voltage control scheme is shown in Figure 2-12.

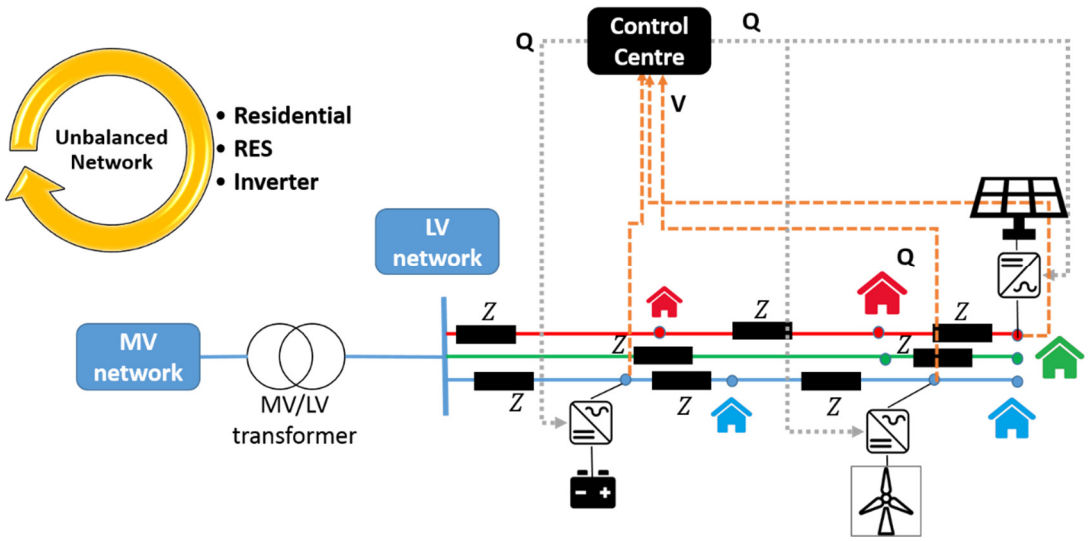


**Figure 2-12 Centralised voltage control**

The decentralised voltage control scheme for active voltage management is shown in Figure 2-13.

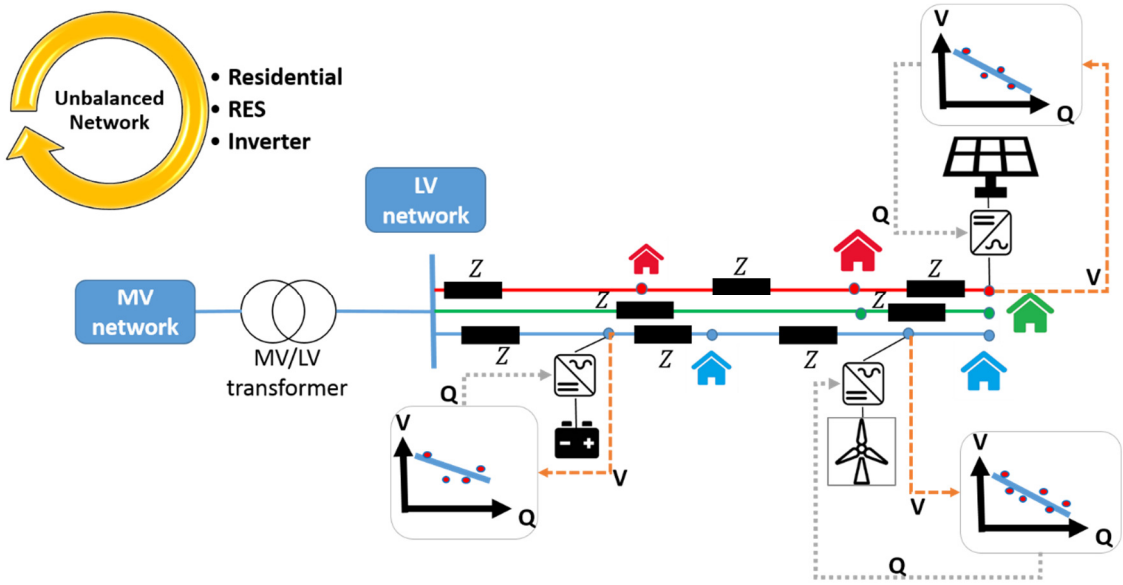


**Figure 2-13 Decentralised Volt-var curve based voltage control**

The local voltage at the connection point is measured and will be sent to the VVC. Based on the VVC the optimal Q setting will be sent back to the inverter.

### 2.3.2 Determination of the Volt-var curves

A four stage multi-scenario analysis, building on the work of [20], is used to investigate the Volt-var curves that arise from differing objectives of the DSO. This database is fed to the 3-OPF tool in **Stages I – IV** for the formation of the Volt-var curves as shown in Figure 2-14. Each stage is described as follows:

- Stage I – Optimal voltage setting

The purpose of Stage I is to ascertain the single optimal voltage at the terminals of the RES connection that optimises the object function across the multi-scenario case study. At this stage, the reactive power resource available from the inverter technology is left unconstrained. The optimal **voltage magnitude** setting found for each RES is passed to Stage II of the analysis.

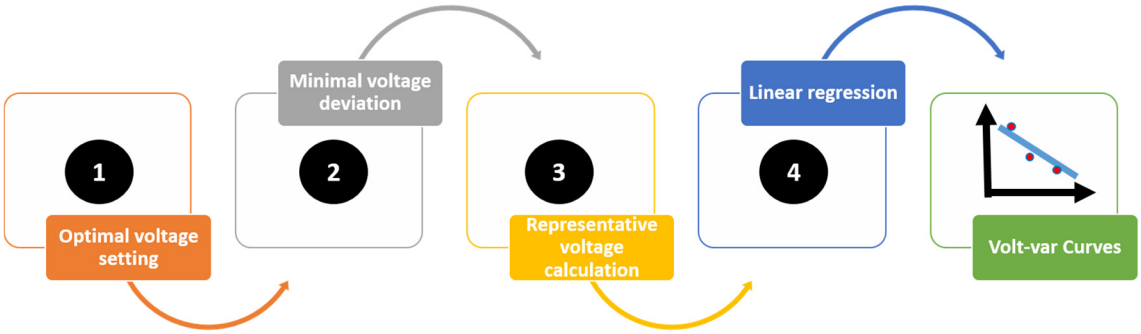


**Figure 2-14 Four stages of VVC determination**

- Stage II – Optimizing the objective function

Taking the voltage target output from Stage I, Stage II determines, for every scenario, the minimal possible voltage deviation from optimal.

The new objective minimises the difference in the sum of squares between the optimal target voltage and the best possible voltage achievable by utilising the available reactive power. For Stage II of the analysis, the reactive power constraints of the RES are implemented. In the case of inverter capabilities of a PV, there is a limitation in the amount of reactive power resource the device can provide, directly proportional to the active power output. The technical constraints of

the inverters are implemented in the 3-OPF tool and the optimisation procedure is run once for each inverter-based RES connection to be fitted with a Volt-var curve. The **reactive power set-points** of Stage II, obtained for each RES, are stored to be used as one of two inputs to Stage IV.

- Stage III – Representative voltage calculation

In Stage III, straightforward power flow solutions are obtained, with the RES constrained to operate at unity power factor. No optimisation is performed in this examination of the scenarios. The aim here is to examine the resulting voltages, should no reactive power be injected or absorbed at the location of RES. This analysis gives an indication of the representative voltages that may exist at varying generation levels coinciding with the voltage sensitivities of demand at these times. The resulting **voltage magnitudes**, observed in each scenario, at the terminals of the RES units are the second and final input required to calculate the Volt-var curves, in Stage IV.

- Stage IV – Formulation of Volt-var curves using linear regression

In Stage IV, the resulting reactive power set-points of Stage II and voltage set-points of Stage III, obtained for each RES under examination, are inspected to be formulated into a Volt-var curve. Figure 2-15 shows an example of a Volt-var curve. As seen the orientation of the Volt-var curve should exhibit a negative slope and the intercept of the curve should match the optimal voltage set-point for the RES unit. The **slope** and **intercept** are the two characteristics to be determined from this offline analysis.

The intercept, $c$, of the Volt-var plots should, in theory, match the exact voltage found for the RES systems in Stage I of this procedure. The slope of these curves ($m$, coefficient of $Q_{RES}$) guide the RES unit to control their absorption/injection of reactive power based on the monitored voltage at their terminals. Employing a linear regression analysis to the voltage and reactive power set-points, calculates the slope and intercept for each RES system. This formulates the relationship between the voltage observed at the terminals of the RES system, $V_{RES}$, to a reactive power output $Q_{RES}$, of the form seen in equation (3.1).

$$V_{RES} = mQ_{RES} + c \tag{3.1}$$

Recall, that in achieving the voltage, determined in Stage I, the RES units are providing sufficient reactive power to support, and achieve, the objective of the DSO; in this case the minimisation of voltage unbalance. Hence, the instructions can be relayed in a decentral manner for online-implementation of the AVM technique.

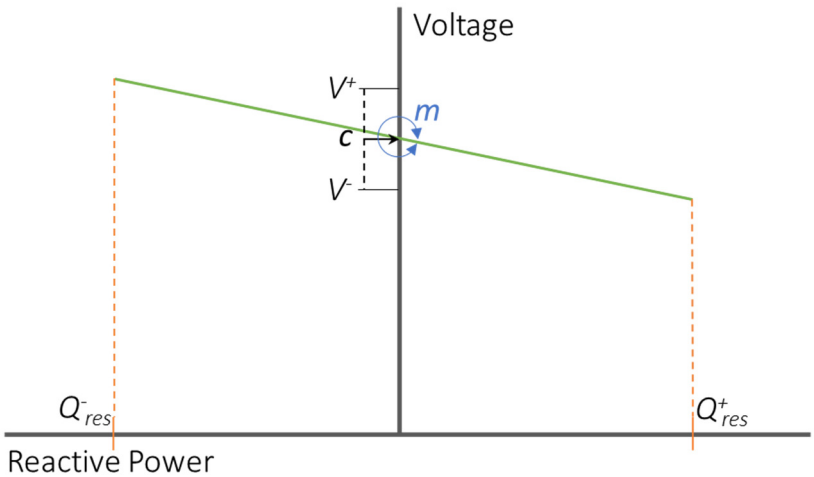


**Figure 2-15 Sample VVC showing orientation and bounds of voltage and reactive power**

To summarise the procedure involved in producing the Volt-var curves the following flow-chart of Figure 2-16 is provided.

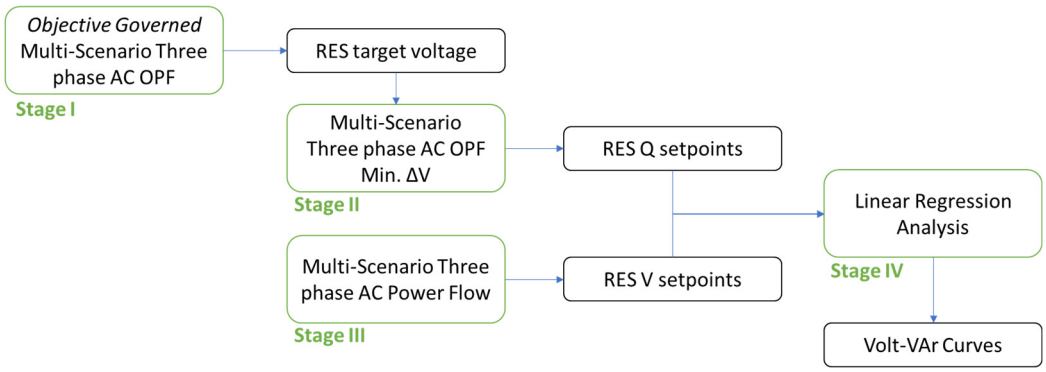


**Figure 2-16 Procedure to determine objective governed VVC using the 3φ-OPF tool**

- Stage I determines the optimal voltage across all scenarios that minimises the voltage unbalance of the feeder, or other objectives of interest.
- Stage II then determines the closest possible voltage deviation from optimal in each scenario, constraining the reactive power of the RES units to within representatively realistic bounds.
- In Stage III, the voltages are determined that occur at varying generation levels coinciding with the voltage sensitivities of demand at these times.
- Finally, to conclude the offline-procedure the resulting reactive power set-points (Stage II) are plotted against the resulting voltage set-points (Stage III) to determine the Volt-var curves for each RES system.

The AVM technique reduces the offline centralised analysis to an online and decentral deployment through the means of optimally chosen Volt-var curves, giving a practical means to facilitate the objectives of the DSO by managing the voltages on distribution systems.

### 2.3.3 Irish Field Trials for VVC

**The field trials of the proposed VVC based reactive power support of inverter based RES are being performed specially on the following sites:**

- Active voltage management (SV_B) for Trial site RES-PV-NTC-0
- Active voltage management (SV_B) for Trial site RES-BAT-FIRE-0
- Active voltage management (SV_B) for Trial site RES-V2G-LEOP-0

#### 2.3.3.1 Network codes validated in these Trials

- NC.3 Distribution system – voltage control
- NC.14 Decentralized voltage control
- NC.15 Requirements for new behaviour of RES inverters
- NC.18 Leading power factor

#### 2.3.3.2 Methodology

The inverter will be operated in grid connected mode. Figure 2-17 Summarizes the trial procedure.

- The voltage at the connection point of each (PPC) is measured and the measured value is transferred to the local control unit.
- After receiving the required data, each local control unit finds the applicable change in the reactive power injection of regarding inverter.
- The new reactive set-point of this inverter is transferred to the inverter to change the reactive power support accordingly.
- The new setting is applied
- The voltage at the connection point of each (PPC) is measured and the measured to check if the desired objective is satisfied or not.
- Save the data for future analysis

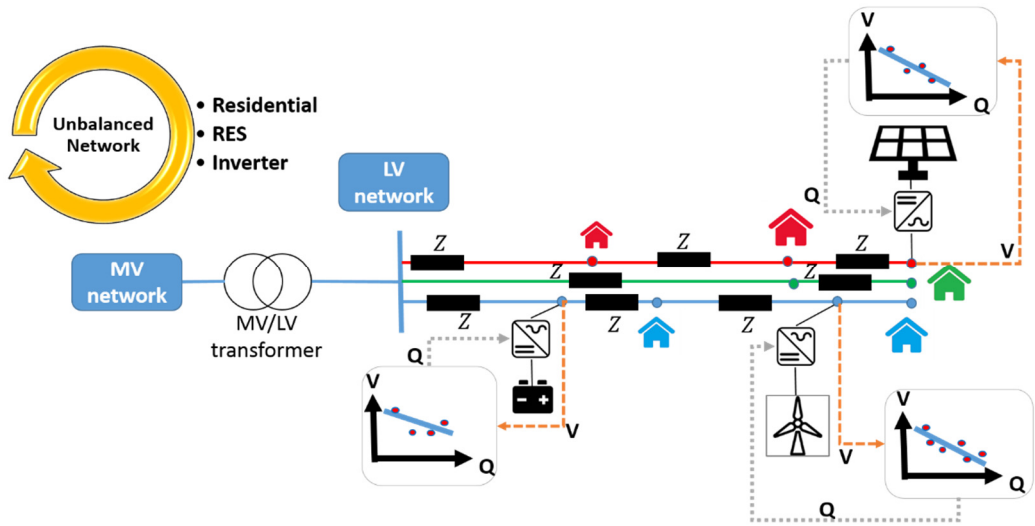


**Figure 2-17 Summary of the trial procedure for VVC**

## 2.4 Conclusion

This chapter proposes the network codes from the outcome of the technical work of scenario SV_B Static Voltage Stability assessment. A set of network codes are proposed covering various aspects of the scenario from a DSO perspective and from that of the RES inverter. The proposed power factor and reactive power support requirements for different technologies including wind, PV and energy storage technologies are presented. Few of the simulations are already completed and the results are presented in this chapter. The remaining simulation and trials will be performed in last 12 months of the project.

The 4 most important network codes identified which are relevant to SV_B is provided below:

- NC.3 Distribution system – voltage control
- NC.14 Decentralized voltage control
- NC.15 Requirements for new behaviour of RES inverters
- NC.18 Leading power factor

# 3. Drafting Network code recommendation from power electronic stability criteria and online system monitoring perspective (RWTH)

Currently, the PV inverters in LVAC grids are not controlled by the DSO operator. Presently, the RES inverters act as negative loads and they do not receive any real or reactive power setpoints from the DSO. Impact of the increasing RES needs to be duly considered for both steady state and dynamic operation of the grid. Various DSO operators across Europe have different grid codes for RES inverters. However, a generalisation among all the codes is that RES inverters are recommended to operate in a certain range of power factor. A conservative formulation of the grid code on power factor does not lead to optimal power flow in the distribution grid as shown in *D3.2*. Furthermore, for fast voltage support, the grid codes should allow fast dynamic injection or absorption of reactive power.

The power factor for Irish distribution grid must be strictly between 0.90 to 1 (DCC6.9.1 [1]); the system is expected to be inductive where reactive power is only absorbed. This condition needs to be relaxed for the envisioned futuristic grid. The new LV grid code VDE-AR-N 4105 in Germany is formulated to support the penetration of PV [2]–[4]. The power factor in German LV grid according to this standard can vary between 0.90 lagging (inductive) to 0.90 leading (capacitive) based on the active power change [2]. This will enable the PV inverter to either absorb reactive power (when voltage is higher than nominal) or inject reactive power (when voltage is lower than nominal). Additionally, under this paradigm, the local inverters provide an ancillary service known as fault ride through (FRT), where the inverter injects reactive power under fault condition to stabilize the grid voltage [2], [4].

In the futuristic grid with nearly 100% RES, due to large number of tightly coupled inverters in action, the centralised approach may not work. DSOs must control the inverters in a decentralised manner. Therefore, grid codes must allow DSOs to have communication with the residential PV inverters.

We bring the standard DPC4.2 to focus which complies with the EN 50160 standard approved by CENELEC [5]. A 10% voltage fluctuation is allowed in this system. DCC6.8.3 provides information on voltage flicker and harmonic distortion at each harmonic. Since the methodology of impedance identification in the project RESERVE involves the injection of pseudo random binary sequence (PRBS) signal into the inverter controller, the inverter injects this noise into the grid for a brief time frame. While performing trials at RWTH laboratory and field trials in Irish grid, the harmonic distortion should be computed to observe if it satisfies the present standards (DCC6.8.3 [1]). In case of minor deviations from the current standard, minor modifications in the grid codes that are required need to be identified after the deliverable trials.

Through the results presented in the deliverable D3.2, an initial glimpse on how phase margin or gain margin could be standardised is obtained. By the completion of task T3.3, the minimum amount of margin that the system must possess will be specified. Based on this minimum margin, the algorithm implemented in SSAU would communicate the inverters the needed impedance manipulations to maintain margins.

Ancillary services are those services or equipment which help in autonomous functioning of the power system such as frequency and voltage regulation. The PV inverter itself which provides voltage stability support is an important ancillary service. The definition of stability analysis and control based on VOI increases the dependency on ICT infrastructure and other ancillary services. The WSI tool which is required to measure the grid and inverter impedance is an important ancillary service present at the customer end. Similarly, the VOI is an ancillary service which is local to the inverter.

## 3.1 List of Recommendations of Ancillary Services and NC Definitions to be Added and/or Modified and Rationales Behind

### 3.1.1 Control of Power-Electronic based Active Distribution Grids

#### 3.1.1.1 NC.1: Decentralised Voltage Control

The state-of-the-art voltage regulation concept in LVAC grids is based upon centralised control. The SSAU regulates the LVAC feeder voltage through changing the tap positions in the On-Load Tap Changing (OLTC) Transformers and by switching ON and OFF capacitor banks to regulate reactive power flow, thereby controlling the bus voltage. With the rise in inverter-based RES units, the dynamic interactions among large number of power electronic converters might lead to unstable modes or oscillatory modes in the feeder voltage profile. Therefore, we recommend the practice of decentralised voltage control for the DSO. The underlying ideology is that the large number inverter-based RES units in the LV grid is considered as degrees of freedom for control.

#### 3.1.1.2 NC.2: Leading Power Factor Operation

The work done with the scenarios SV_A and SV_B would demand the RES inverters to operate with a leading power factor at times for providing grid voltage support. In the current scenario, the power factor is operated with only a lagging power factor in certain DSOs. Hence this WP will provide recommendations to modify the grid code to include leading power factor. The implementation of VOI control enables dynamic injection or absorption of reactive power based on the amount of voltage overshoot or undershoot. Thus, under dynamic conditions, the power factor of the inverter can be leading or lagging more than the specification in existing grid codes.

### 3.1.2 Monitoring techniques for DSOs for Power-Electronic based Active Distribution Grids

#### 3.1.2.1 NC.3: Dynamic Stability Margins

With large number RES inverters in the LVAC grids, we envision a virtual impedance based decentralised control. For accessing the grid voltage stability, a stability monitoring algorithm is developed which is placed in the SSAU. The stability of such a dynamic system is assessed through dynamic stability margins such as gain and phase margins. In the current grid codes, there is no such definitions found. Hence for the futuristic grids, we propose the inclusion of dynamic stability margin definitions. Additionally, we envision through our work to determine minimum dynamic stability margin limits or thresholds that the system must possess.

### 3.1.3 New generation of Power-Electronic converters

#### 3.1.3.1 NC.4: Requirements for new behaviour of RES inverters

In the context of decentralised control, the control command received from a tertiary level or from a Microgrid operator might be setpoints for real and reactive power in a conventional sense. However, the methods developed in WP3, envisions a case where the higher level might modify the behavioural of inverter. By behavioural we mean the control parameters themselves. The examples pertaining to WP3 are presented as follows:

- The Dynamic Voltage Stability Monitoring (DVSM) (SV_A) functionality which resides in the SSAU would send control commands back to the VOI controller, which will in turn modify the control parameters of the inverter to achieve the set-point impedance. Hence, the behavioural of inverters are modified here and since the SSAU sends these commands, the DSO grid codes must allow it.
- The Active Voltage Management (AVM) (SV_B) technique modifies the Volt-var curves of the RES inverter. Hence the concept of Volt-var curve definition for house RES inverters must be included into the grid codes.

#### 3.1.3.2 NC.5: New requirements for the perturbations injected from RES inverters

Grid codes should be formed related to the injection of white noise signal into the grid voltage for a short duration. The white noise signals, otherwise known as Pseudo Random Binary Sequence (PRBS) is generated in the control loop of the inverter, where the duty cycle or current/voltage reference are perturbed. This induces perturbations on the output voltage and current of the

inverter for impedance measurement. In WP3, we will determine magnitude of perturbation required for accurate determination of impedance and injection time period that is required for the noise injection and propose them for new grid codes.

## 3.2 Methodology and Case Studies Done to Support the Recommendations

### 3.2.1 Offline VOI Implementation: Proof of Concept

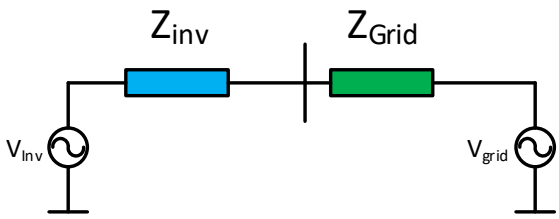


**Figure 3-1 VOI Offline simulation**

#### 3.2.1.1 Objective

The goal of this offline simulation is to validate the newly proposed VOI control technique. The behaviour of the inverter can be modified according to the grid conditions and this property can be utilised in a grid friendly way when included in grid codes.

#### 3.2.1.2 Network codes validated in this methodology/Case Study

NC.4 Requirements for new behaviour of RES inverters

NC.2 Leading Power Factor Operation

#### 3.2.1.3 Methodology

This simulation is performed in MATLAB/Simulink. A voltage controlled (VC) inverter is considered which is connected to a complex passive RLC load as shown in **Fehler! Verweisquelle konnte nicht gefunden werden.**. The load model is analytically known. The previous assumption is valid since the load/grid impedance knowledge can be extracted by the proposed WSI tool. Based on the known grid impedance model, the VOI calculation can be performed.

#### 3.2.1.4 Results

Note that the weighting matrix in the design of VOI controller allows the grid operator to adjust the parameters of this weighting matrix to design a suitable VOI controller. Therefore, for a variation of this weighting matrix, a change in the closed-loop output impedance is observed. **Fehler! Verweisquelle konnte nicht gefunden werden.** shows the variation of impedance in the frequency domain. The curve in red, represent the scenario when no VOI was in place. Not that the impedance magnitude in low frequencies was too low. This can be improved by using VOI controller. **Fehler! Verweisquelle konnte nicht gefunden werden.** shows the time domain behaviour of the VOI controlled inverter for different values of the weighting matrix. Notice that the overshoot, undershoot and settling times can be adjusted by modifying the impedance of inverters. We are able to influence the stability margins at the power electronic interface. Since the VOI control methods are based on robust stability theory, we are able to design controllers which promise robustness properties.

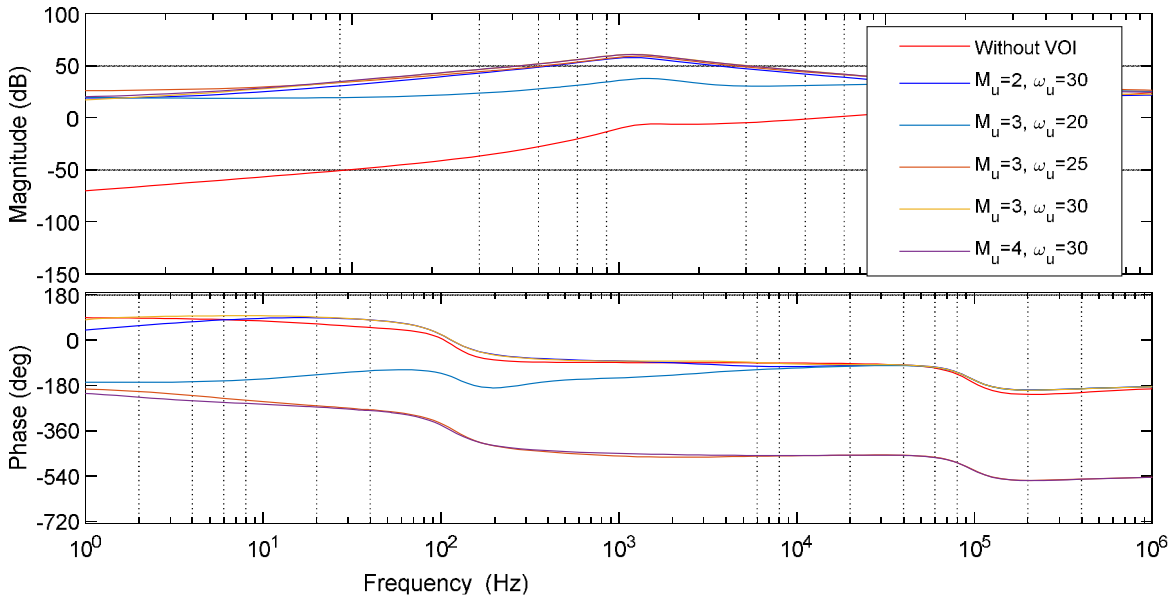


**Figure 3-2 VOI frequency domain behaviour**

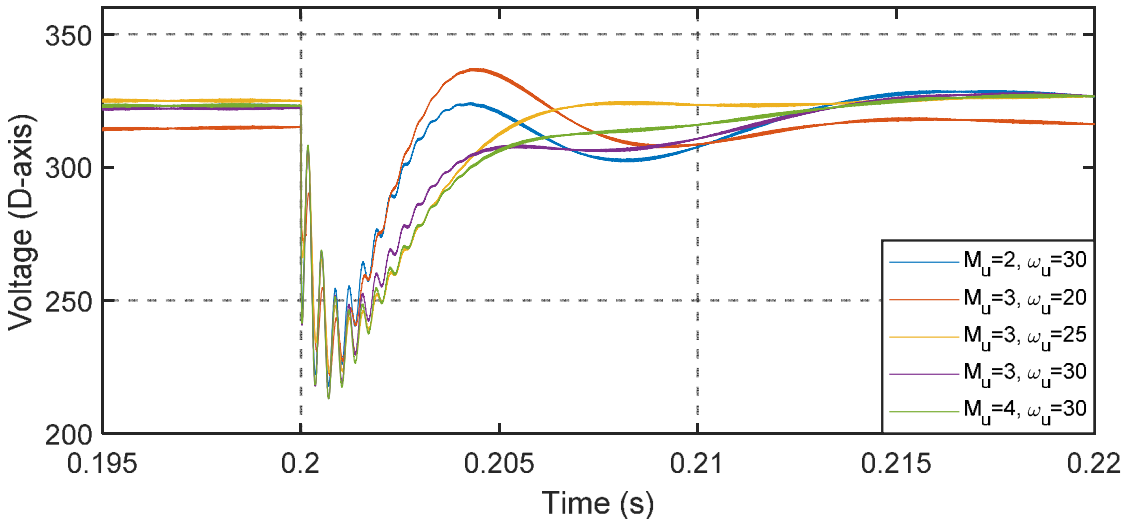


**Figure 3-3 VOI time domain behaviour**

### 3.2.2 Grid Impedance measurement: WSI technique

#### 3.2.2.1 Objective

Validate the application of WSI technique in a power-electronic driven active distribution grid. Furthermore, investigate the uncertainty and improve the WSI tool. Propose new grid codes related to noise injection in distribution grids.

#### 3.2.2.2 Network codes validated in this methodology/Case Study

NC.5 New requirements for the perturbations injected from RES inverters

#### 3.2.2.3 Methodology

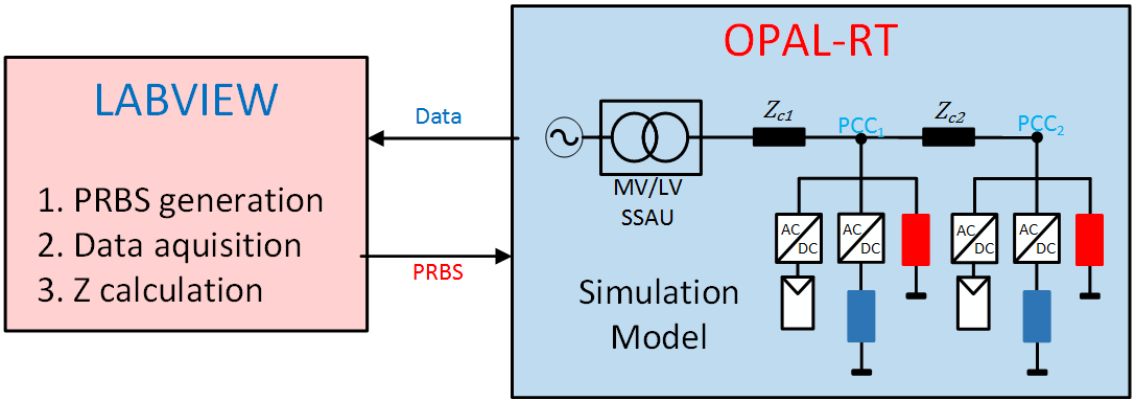


**Figure 3-4 WSI *HiL* Setup**

The PRBS generator, data acquisition and impedance calculation routines are implemented in LabVIEW. The multi-threaded architecture of Virtex-5 programmable FPGA of the NI PCIe-7841R RIO enables the parallel operation of PRBS injection and data acquisition. The high-performance DAC and ADC for the outgoing and incoming data conversion aids the process. The impedance calculation and complex curve fitting is also a computationally complex process which is performed with ease using this hardware. The input to this simulation environment is the voltage, current measurement data and the output is the PRBS signal.

The RT-Lab environment of OPAL-RT system provides the link to MATLAB Simulink. This allows detailed switched models of inverters and grid connected inverters built in MATLAB Simulink to be transferred to the RT-LAB environment, where the complex system can be simulated in a real-time manner with feasibility of real time multiple inputs and outputs. The eMEGAsim open real-time software component of the RT-Lab runs on the OP5600 hardware, which consists of two six core Intel CPUs and a Xilinx Virtex 6 FPGA board. This advanced feature allows complex simulations to be run on real time. This allows the distribution grid model with inverters and active rectifiers from MATLAB Simulink to be loaded into RT-LAB for real time simulations. The input to this simulation from the external world is the PRBS signal and the output is the voltage and current values.

The PRBS signal can be injected on command using a virtual PC. In parallel, the data acquisition event takes place. The data is that of voltage and current measurements at the output terminals of the inverter model. The time window of PRBS injection, the amplitude of noise and some additional parameters related to PRBS generation algorithm can be varied. In this simulation, the number cycles N=10 and the data acquisition is done at $t_s$=20 µs.

#### 3.2.2.4 Results

The WSI tool firstly extracts the non-parametric grid impedance followed by which linear system identification technique is applied to determine the parametric impedance. The extracted *dq* matrix is represented by 4 frequency domain plots where the diagonals represent $Z_{dd}$ and $Z_{qq}$ impedances and the off-diagonal plots represent $Z_{dq}$ and $Z_{qd}$. Results of this test case is shown in **Fehler! Verweisquelle konnte nicht gefunden werden.**. The WSI tool effectively measures and identifies the active grid model.

We recommend for the amplitude of injected PRBS to be adjusted to introduce perturbations of roughly 4% to effectively identify grid impedance. Furthermore, we recommend the superimposition of PRBS signals in both the control and reference signals. This will make sure that the controller does not reject PRBS signals as an external disturbance.

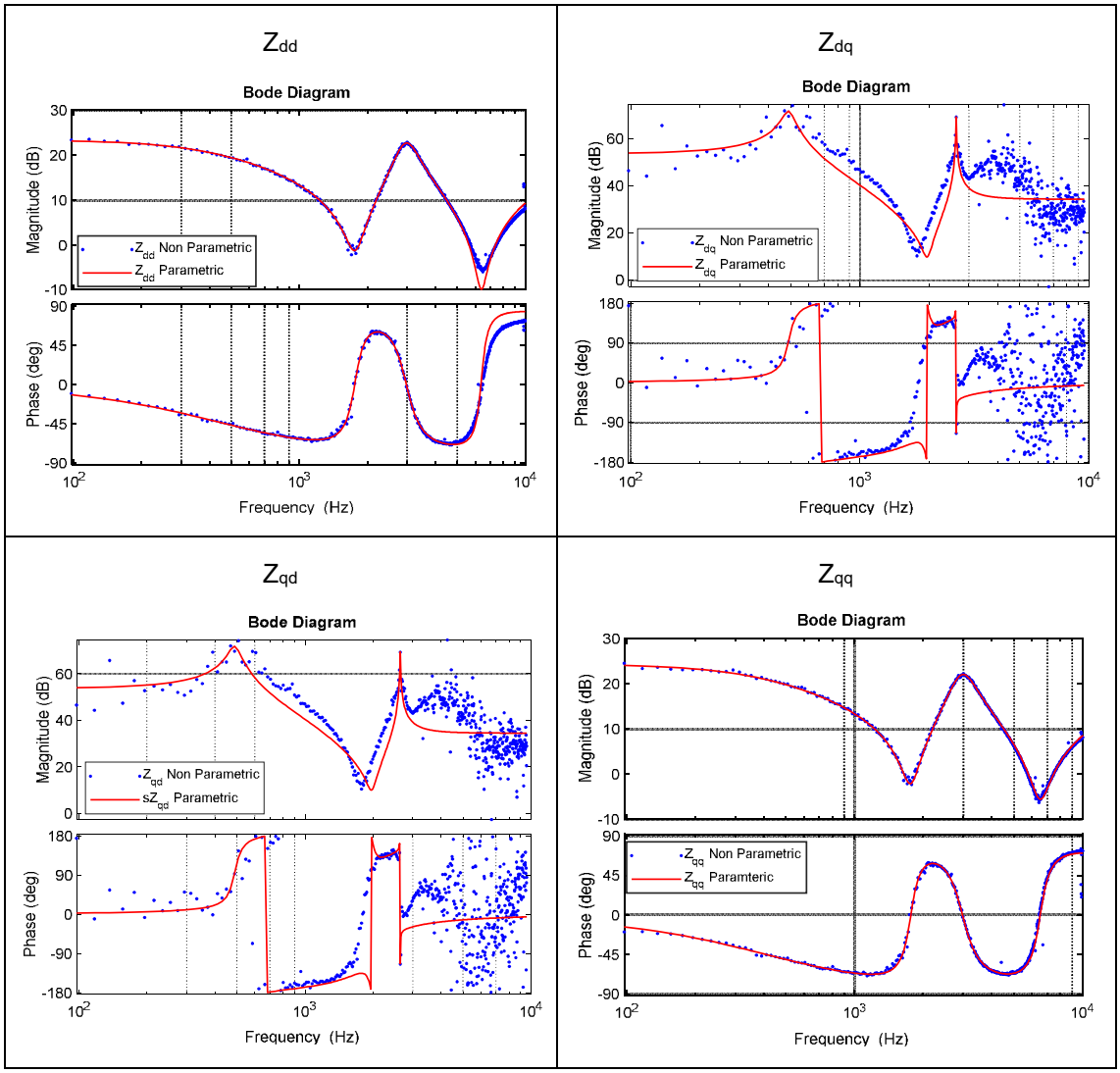


**Figure 3-5 Validation of WSI in an Active Distribution Grid**

### 3.2.3 Voltage stability monitoring algorithm

#### 3.2.3.1 Objective

To validate the DVSM algorithm and validate the proposed network codes related to dynamic stability margins. This setup will also demonstrate the idea of ICT driven decentralised voltage which DSOs can adopt.

#### 3.2.3.2 Network codes validated in this methodology/Case Study

NC.1 Decentralised Voltage Control

NC.3 Dynamic Stability Margins

NC.4 Requirements for new behaviour of RES inverters

#### 3.2.3.3 Methodology

Validation of DVSM algorithm will be undertaken in RWTH lab in Aachen using the HiL setup shown in **Fehler! Verweisquelle konnte nicht gefunden werden.**. The *HiL* setup consisting of OPAL-RT and Labview are already running and this setup is used to validate the WSI tool. An extension of this real-time simulation is the inclusion of the virtual machine (VM) where the stability monitoring algorithm and VOI calculations are implemented. This experiment will effectively

demonstrate the idea of ICT driven decentralised control in futuristic distribution grids which DSOs can adopt.

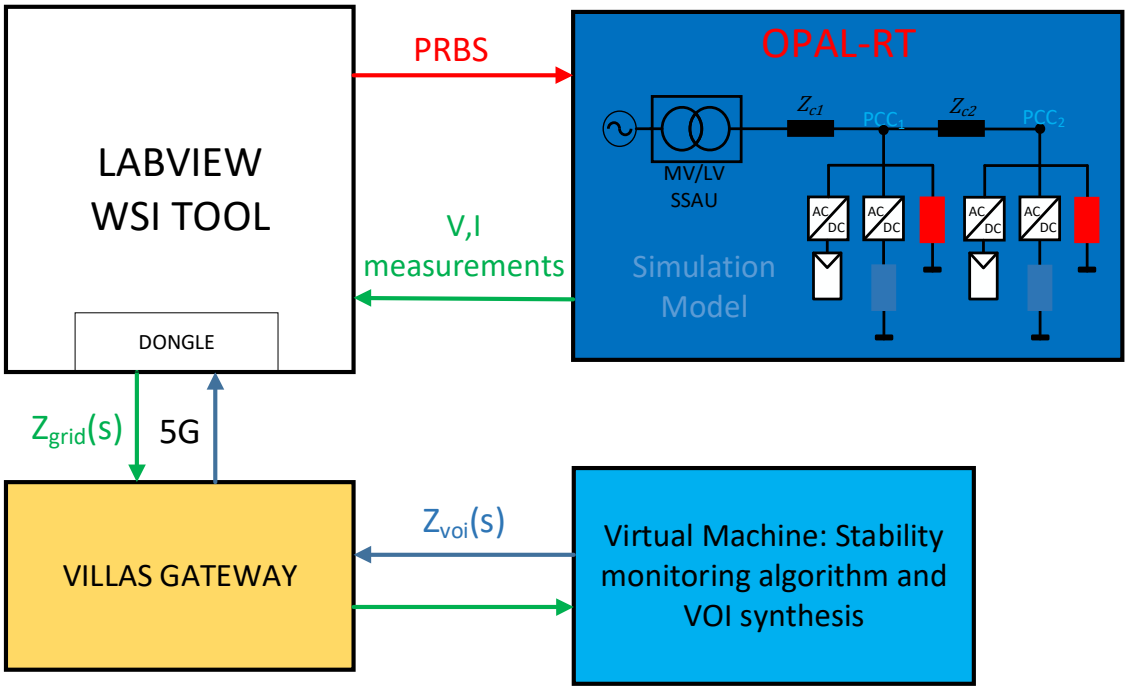


**Figure 3-6 DVSM (SV_A) HiL Validation at RWTH lab, Aachen**

#### 3.2.3.4 Results from offline simulations

The above-mentioned online simulation will be performed in the upcoming 6 months and the preparation is underway. Here we present the results related to dynamic stability margins from offline simulations. The impact of impedance return ratio matrix on dynamic stability margins is presented in **Fehler! Verweisquelle konnte nicht gefunden werden.**. The grid impedance was changed to create two simulation cases and by applying the Generalized Nyquist Criterion (GNC) to the impedance return ratio matrix, the characteristic loci are obtained. The stability margins are high in Case 2. Therefore, in Case 2, the time domain simulations show less oscillations and much a stable response.

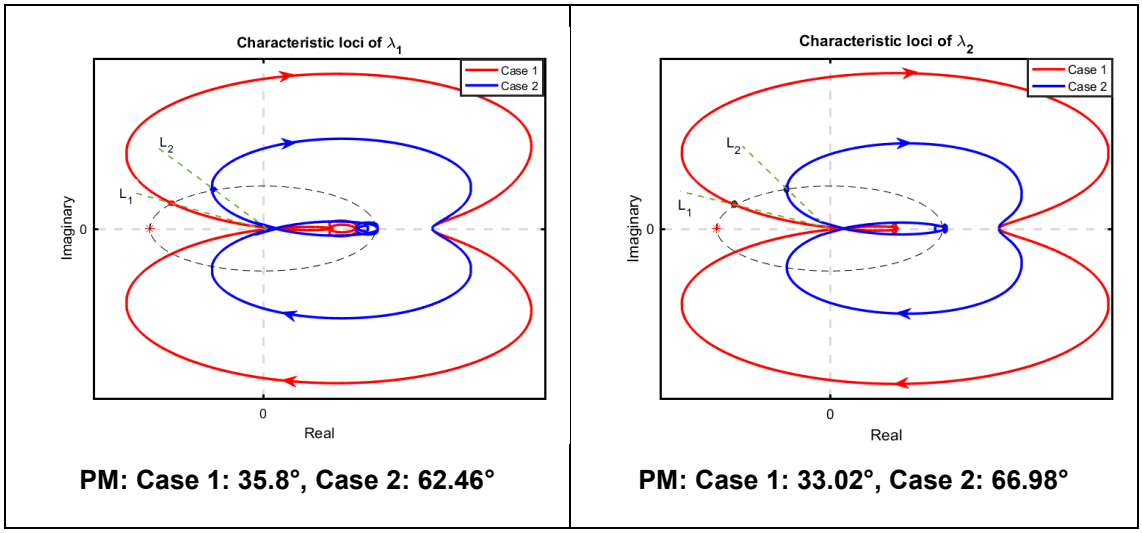


**Figure 3-7 Impact of Impedance ratio on stability margins**

An extension of the stability monitoring algorithm for active distribution grids was done in Deliverable **D3.3**. The impact of the cable length between every inverter in the grid on the stability margins of the grid was analysed. A LV distribution grid data from a section of Irish LV grid was considered for this analysis. As the relative distance/cable length between every inverter is increased from the nominal values, the phase margin of the system also increases indicating increased stability of the system. Similarly, as the relative cable length decreases, the phase margin decreases. This effect is showcased in Figure 3-8.

In the future, with more and more RES inverters being introduced into the LV grid, the relative distance between RES inverters is expected to decrease which leads to increased interactions among converters. The stability margins are low and leads to an oscillatory behaviour and may possibly lead to harmonic instability. We think that phase margins above 60 degrees lead to robust and stable operation of the grid towards disturbances.

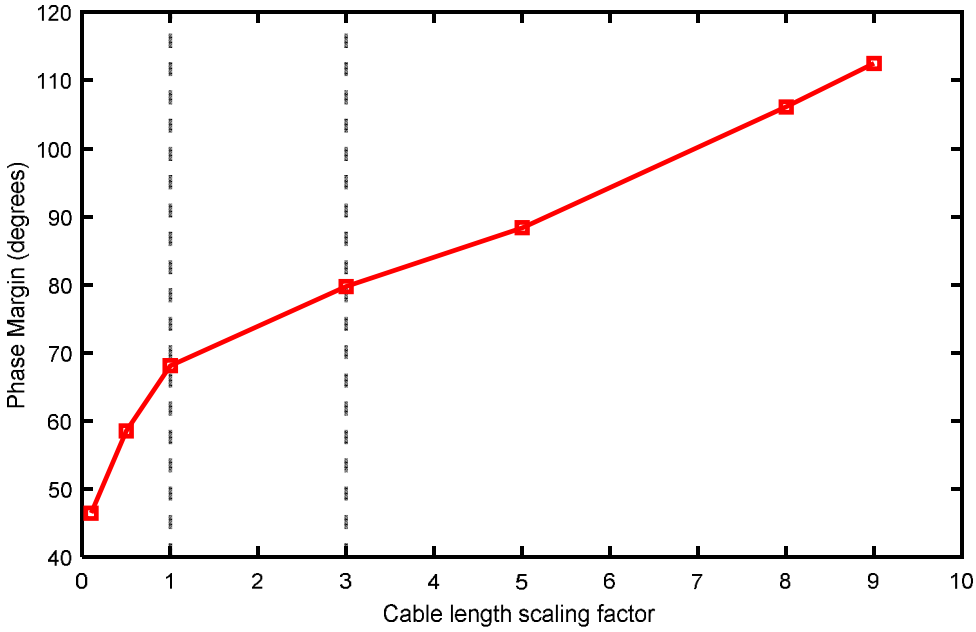


**Figure 3-8 Impact of relative distance between RES inverter on system stability margin**

### 3.2.4 DVSM Trial at RWTH lab, Aachen

Two field trials are proposed for the validation of SV_A scenario. One of the trials will be conducted at RWTH lab in Aachen and the other trial will be conducted in ESB, Ireland. Both these trials will be using the new prototype inverter developed by RWTH. Since it is only a prototype inverter, we cannot effectively demonstrate validation of decentralised voltage control and low power factor grid codes with the Irish field trial setup. These demonstrations can be effectively performed in the lab at RWTH, Aachen. The Irish field trials are mainly used for performing real-time measurements of impedance on an actual grid and provide proposals for new requirements for the perturbations injected from RES inverters for the measurement of grid impedance..

#### 3.2.4.1 Objective

Study the quality of extracted impedance and investigate the applicability of the developed WSI technique for futuristic RES inverters in active distribution grids. Demonstrate the stability monitoring algorithm and VOI control.

#### 3.2.4.2 Network codes validated in this Trial

NC.4 Requirements for new behaviour of RES inverters

NC.5 New requirements for the perturbations injected from RES inverters

#### 3.2.4.3 Methodology

Before performing the test in Ireland, a trial will be performed in RWTH lab in Aachen. The setup consists of a low power inverter connected to a passive load as shown in **Fehler! Verweisquelle konnte nicht gefunden werden.**. WSI which is local to the inverter measured the grid impedance, which is the known passive load in this case. The measured grid impedance data is communicated to a virtual machine (VM) which mimics the role of the SSAU. Stability monitoring calculations and VOI calculations are implemented in the VM.

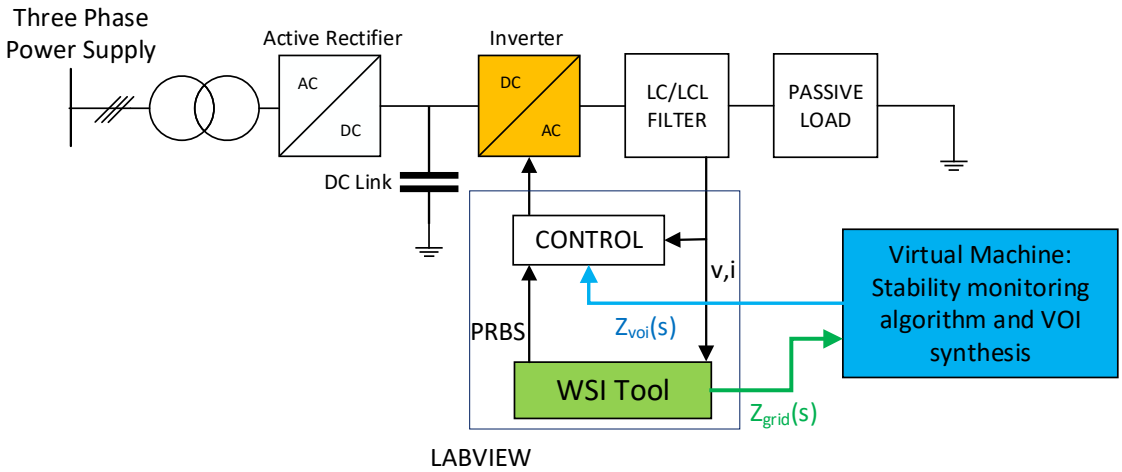


**Figure 3-9 DVSM Field Trial in RWTH lab, Aachen**

### 3.2.5 Irish VOI Field Trials

As mentioned before, the Irish trials will be mainly focussing on the impedance measurement process and impedance measurement tool. The trial would reinforce the initial requirements of perturbations for RES inverter derived from off-line and on-line simulations.

#### 3.2.5.1 Objective

Study the quality of extracted impedance and investigate the applicability of the developed WSI technique for futuristic RES inverters in active distribution grids.

#### 3.2.5.2 Network codes validated in this Trial

NC.4 Requirements for new behaviour of RES inverters

NC.5 New requirements for the perturbations injected from RES inverters

#### 3.2.5.3 Methodology

The experimental setup to be used in Ireland is shown in **Fehler! Verweisquelle konnte nicht gefunden werden.**. The low power inverter prototype is encapsulated within the red box.

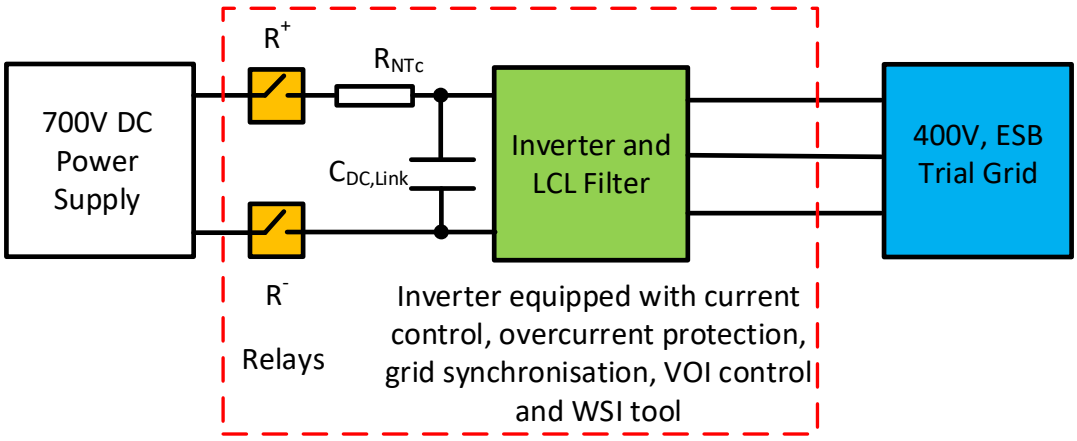


**Figure 3-10 SV_A Field Trial - Hardware Setup**

The inverter will be operated in grid connected mode. PRBS noise will be injected for 200 ms (10 cycles) and simultaneously the voltage and current measurements are sampled. This data will be stored in a first-in-first-out (FIFO) buffer. (A) See the quality of extracted non-parametric impedance b) study the impact of PRBS noise level on the extracted impedance. C) Activate the VOI control loop and observe the performance D) Save data for future analysis

## 3.3 Conclusion

This chapter proposes the network codes from the outcome of the technical work of scenario SV_A Dynamic Voltage Stability Monitoring. A set of 5 network codes are proposed covering various aspects of the scenario from a DSO perspective and from that of the RES inverter. We propose a change in the way DSOs operate and monitor the status of the grid. Furthermore, a 5G ICT driven decentralised control of RES inverters is proposed for the inverters. The 5 most important network codes identified which are relevant to SV_A is provided below:

- NC.14 Decentralised Voltage Control
- NC.18 Leading Power Factor Operation
- NC.17 Dynamic Stability Margins
- NC.15 Requirements for new behaviour of RES inverters
- NC.16 New requirements for the perturbations injected from RES inverters

Offline simulations, real-time *HiL* simulations and field trials that are planned to validate the technical work is presented. Additionally, the mapping between these simulation and field trial experiments to the proposed network codes are elaborated. Few of the simulations are already completed and the results are presented in this chapter. The remaining simulation and trials will be performed in last 12 months of the project.

# 4. ICT Test/Validations to NC proposed in SV_A and SV_B (WIT)

## 4.1 Leading Power Factor Validation

Given that there will be autonomous alterations to parameters on the inverters at the RES Units with the deployment of the execution of the VVC's it is prudent that the potential effect be validated against the network codes as a policy-based validation system. This system would involve extracting quantifiable values from the relevant network codes and deploying them in conjunction with the deployment of the execution of the VVC as a control. To take the example of the proposed code pertaining to the Leading Power Factor, which at LV level is called a Unity Power Factor and has a value of 0.95, and applying the range of +/- 3.72%, which creates the upper and lower limits at MV level, we can propose a lagging and leading power factor of 0.913 to 0.985. The diagram in Figure 10 details how this would be represented in a system deployment of the VVC from an ICT perspective.

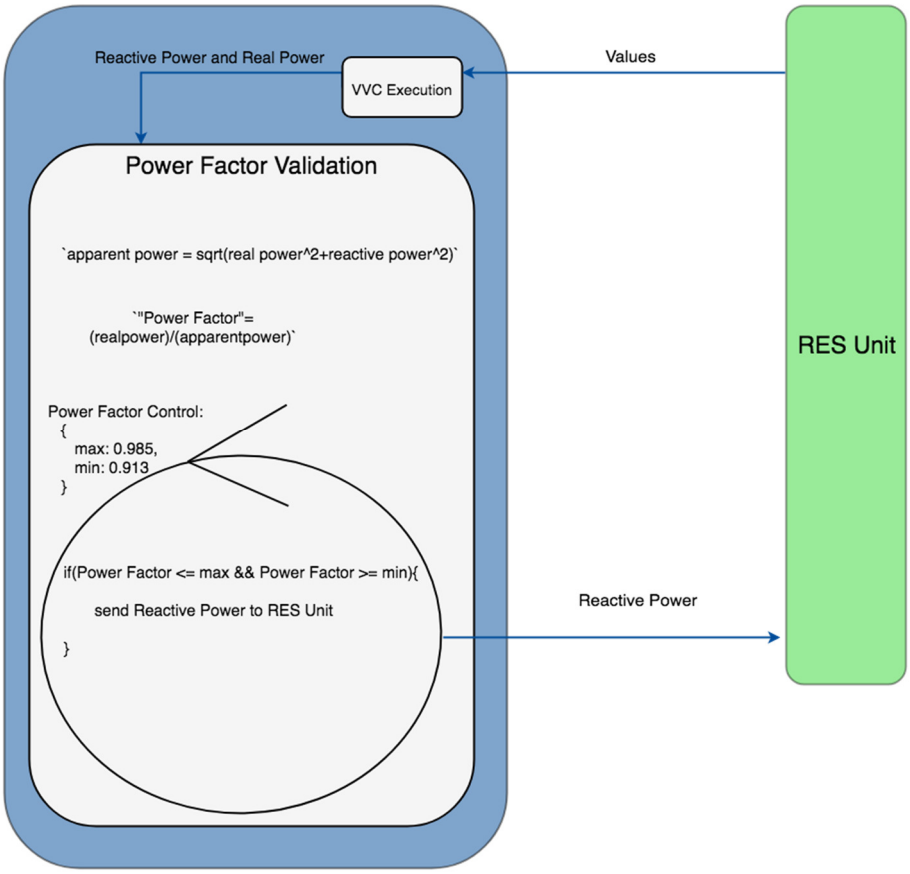


**Figure 4-1 Power factor Validation System**

At present the execution of the AVM in the cloud has a logging mechanism in place and this could be extended to account for the implementation of Leading Power Factor validation. Currently the only data that is being logged is related to the connection status of the MQTT Broker and VVC Database in addition to error messages. This logging functionality could be used to receive violation of the power factor control events and these messages could be sent to a comma separated values (CSV) file which can be later analysed to view the time, real power, reactive power, power factor and VVC values that caused the event.

## 4.2 Decentralised Voltage Control Network Code Validation System

A decentralised voltage control process involves direct communication to each RES Unit so voltage control can be managed for each device independently. Given that throughout this process, multiple variables can change and potentially affect the rate of change it is important to ensure that voltage levels of each RES Unit are increasing/decreasing at a steady rate.

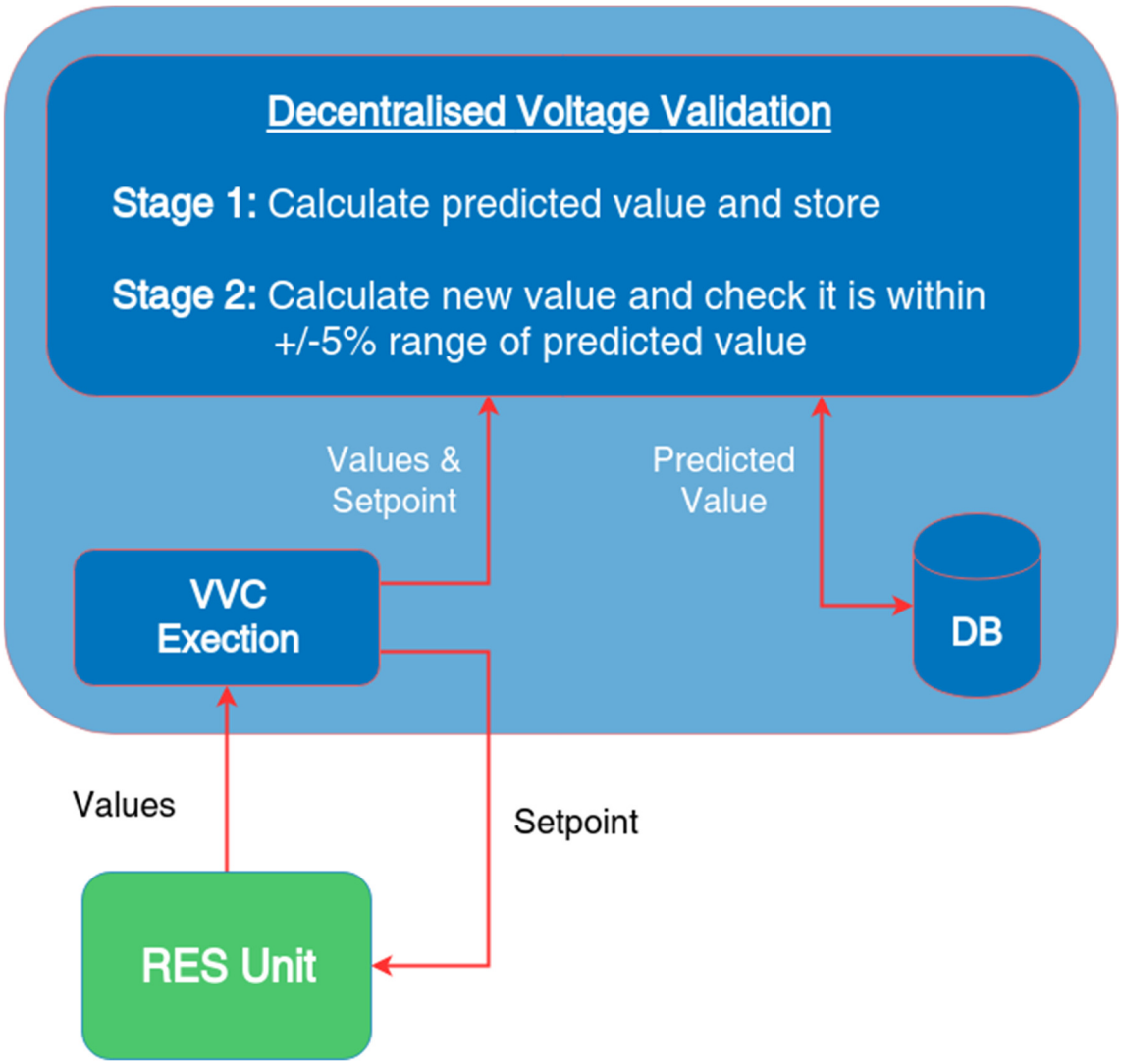


**Figure 4-2 Decentralised Voltage Control Validation**

The validation process can be split into two main stages see Figure 4-2. Stage 1 involves the initial reading of values and calculations. Stage 2 is where the validation process takes place. For stage 1 the voltage is measured and sent to the voltage control system. Here the VVC execution takes place to calculate the set-point value. When the set-point value is calculated it is then used by the voltage validation process to calculate the apparent power using the following formula;$\sqrt{P^2 + Q^2}$. This value is then stored for stage 2. The set-point value is then sent back to the RES Unit.

Stage 2 begins when the second set of readings is received. The apparent power is calculated from these readings and is then validated using the predicted value that was created in stage 1. If this second value is within a range of +/-5% of the predicted value, then the objective function can be seen as improved. This process occurs every 5 minutes for each RES Unit.

Upon completion of the validation process, the values used, and the over-all result will then be written to a CSV document. This document will be used to analyse the performance of the VVC

for a given RES Unit and simultaneously used to validate the Network Codes for Decentralised Voltage Validation. As detailed in **D3.6** section 3.1.2 the point of VVC execution and validation can vary depending on the needs of the site. If the voltage control system for a RES Unit is running outside of a central cloud server then the results will be uploaded to the server to ensure all results are in one central location.

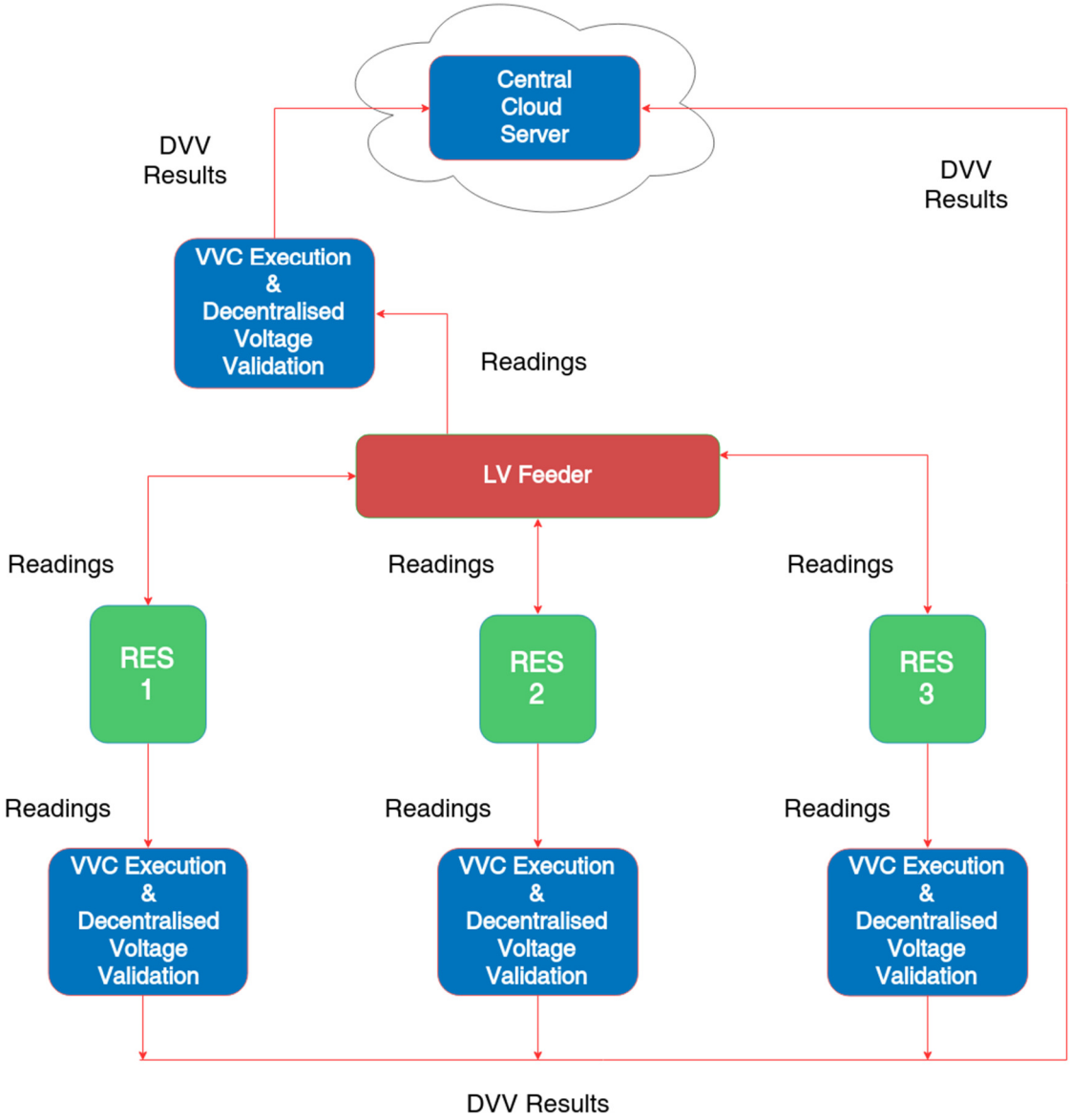


**Figure 4-3 Decentralised Voltage Control Validation Overview**

It should be noted that this process can also be applied when working with an LV feeder head connected to multiple RES Units. With reference to Figure 4-3 the readings from the RES Units can be gathered from the LV feeder and used to calculate an aggregated predicted value. When a set-point value is sent to a RES Unit, a second aggregated value is calculated and is then compared to the predicted value.

# 5. Conclusion

This document describes the network code recommendations for successful implementation of the voltage control scenarios of RESERVE (SV_A and SV_B) in the future distribution networks with high shares of DERs.

Some network code suggestions were proposed to support the successful implementation of the static voltage control (SV_B). According to these recommendations, the reactive power capability of different DER technologies are formulated and mathematically explained. It can be concluded that the decentralised control approach can be achieved using the VVC strategy as demonstrated by the field trials (WP5).

The 4 most important network codes identified which are relevant to SV_B is provided below:

- NC.3 Distribution system – voltage control
- NC.14 Decentralized voltage control
- NC.15 Requirements for new behaviour of RES inverters
- NC.18 Leading power factor

Similarly, the network codes related to the dynamic voltage stability and control (scenario SV_A) are proposed and explained from both the DSO perspective and the perspective of the DER inverter. The role of a 5G ICT driven decentralised control of DER inverters is proposed for the inverters. These suggestions are validated via simulations and field trials. The 5 most important network codes identified which are relevant to SV_A is provided below:

- NC.14 Decentralised Voltage Control
- NC.18 Leading Power Factor Operation
- NC.17 Dynamic Stability Margins
- NC.15 Requirements for new behaviour of RES inverters
- NC.16 New requirements for the perturbations injected from RES inverters

Both control scenarios require the successful sending and receiving signals to/from DER units. This highlights the needs for the availability of a reliable communication infrastructure in the futuristic distribution networks. Both of the types above of recommendations are validated through a procedure to ensure that the DER Units are reacting as expected, whether it is a single/multiple RES Units on the same LV network.

# 6. List of Figures

# 7. List of Tables

# 8. References


[1] ESB, “Distribution Code v5.0.” https://www.esbnetworks.ie/docs/default-source/publications/distribution-code-v5-0.pdf?sfvrsn=6, Apr-.

[2] M. Dietmannsberger and D. Schulz, “Impacts of Low-Voltage Distribution Grid Codes on Ancillary Services and Anti-Islanding Detection of Inverter-Based Generation,” *IEEE Trans. ENERGY Convers.*, vol. 41, no. 4, pp. 1287–1294, 2016.

[3] B. I. Craciun, T. Kerekes, and D. Sera, “Overview of recent Grid Codes for PV power integration,” pp. 959–965, 2012.

[4] E. Demirok, P. C. González, K. H. B. Frederiksen, D. Sera, P. Rodriguez, and R. Teodorescu, “Local Reactive Power Control Methods for Overvoltage Prevention of Distributed Solar Inverters in Low-Voltage Grids,” *IEEE J. Photovoltaics*, vol. 1, no. 2, pp. 174–182, Oct. 2011.

[5] EN50160, “Voltage characteristics of electricity supplied by public distribution systems.” 1999.

[6] Zambia, “ZAMBIAN DISTRIBUTION GRID CODE,” 2016.

[7] Energinet.dk, “Technical regulation 3.2.5 for wind power plants with a power output greater than 11 kw,” 2010.

[8] T. T. GmbH, “Grid Code, - High and extra high voltage,” 2015.

[9] UK, “National Grid code,” 2017.

[10] ESB, “Distribution code,” 2016.

[11] DISPOWER, “Present status of DG in Germany: National codes, standards, requirements and rules for gridinterconnection and operation,” 2005.

[12] Egyptian Distribution Network, “Solar Energy Plants Grid Connection code,” 2017.

[13] M. Braun *et al.*, “Is the distribution grid ready to accept large-scale photovoltaic deployment? State of the art, progress, and future prospects,” in *Progress in Photovoltaics: Research and Applications*, 2012.

[14] NERC, “Reliability Guideline BPS-Connected Inverter-Based Resource Performance,” 2018.

[15] H. (Cooper D. A. Markiewicz and A. (Wroclaw U. of T. Klajn, “Voltage Disturbances Standard EN 50160,” 2004.

[16] Y. Liu, J. Bebic, B. Kroposki, J. De Bedout, and W. Ren, “Distribution system voltage performance analysis for high-penetration PV,” in *2008 IEEE Energy 2030 Conference, ENERGY 2008*, 2008.

[17] CIGRE, “Capacity of Distribution Feeders for Hosting Distributed Energy Resources,” 2014.

[18] C. Long and L. F. Ochoa, “Voltage control of PV-rich LV networks: OLTC-fitted transformer and capacitor banks,” *IEEE Trans. Power Syst.*, 2016.

[19] A. Soroudi, P. Siano, and A. Keane, “Optimal DR and ESS scheduling for distribution losses payments minimization under electricity price uncertainty,” *IEEE Trans. Smart Grid*, 2016.

[20] A. O’Connell and A. Keane, “Volt-var curves for photovoltaic inverters in distribution systems,” *IET Gener. Transm. Distrib.*, vol. 11, no. 3, pp. 730–739, 2017.

# 9. Abbreviations

AVM Active Voltage Management

B2B Business to Business

BMS Building management system

CAPEX CAPital EXpenditure

CENELEC European Committee for Electro technical Standardization

CEP Complex Event Processing

COTS Commercial off-the-shelf

CPMS Charge Point Management System

CSA Cloud Security Alliance

DEMS Decentralised energy management system

DER Distributed Energy Resources

DMS Distribution Management System

DMTF Distributed Management Taskforce

DSE Domain Specific Enabler

DSO Distribution System Operator

EAC Exploitation Activities Coordinator

ERP Enterprise Resource Planning

ESB Electricity Supply Board

ESCO Energy Service Companies

ESO European Standardisation Organisations

ESS Energy Storage Systems

ETP European Technology Platform

ETSI European Telecommunications Standards Institute

GE Generic Enabler

GNC Generalised Nyquist Criterion

HEMS Home Energy Management System

HiL Hardware in the Loop

HV High Voltage

I2ND Interfaces to the Network and Devices

ICT Information and Communication Technology

IEC International Electro-technical Commission

IoT Internet of Things

KPI Key Performance Indicator

LV Low Voltage

M2M Machine to Machine

| | |
|---|---|
| MPLS | Multiprotocol Label Switching |
| MV | Medium Voltage |
| NIST | National Institute of Standards and Technology |
| O&M | Operations and maintenance |
| OLTC | On-load tap changing |
| OPEX | OPerational Expenditure |
| OPF | Optimal Power Flow |
| PCC | Point of Common Coupling |
| PF | Power Factor |
| PLL | Phase Lock Loop |
| PM | Project Manager |
| PMT | Project Management Team |
| POC | Point Of Connection |
| POI | Points of Interest |
| PPP | Public Private Partnership |
| PWM | Pulse Width Modulation |
| PMU | Phasor Measurement Unit |
| PV | Photo Voltaic |
| QEG | Quality Evaluation Group |
| RES | Renewable Energy Source |
| RPP | Renewable Power Production |
| S3C | Service Capacity; Capability; Connectivity |
| SCADA | Supervisory Control and Data Acquisition |
| SDH | Synchronous Digital Hierarchy |
| SDN | Software Defined Networks |
| SDOs | Standards Development Organisations |
| SET | Strategic Energy Technology |
| SET | Strategic Energy Technology |
| SG-CG | Smart Grid Coordination Group |
| SGSG | Smart Grid Stakeholders Group |
| SME | Small & Medium Enterprise |
| SoA | State of the Art |
| SON | Self Organizing Network |
| SRF | Synchronous Reference Frame |
| SS | Secondary Substation |
| SSAU | Secondary Substation Automation Unit |

| | |
|---|---|
| TL | Task Leader |
| TM | Technical Manager |
| TRL | Technology Readiness Level |
| V2G | Vehicle to Grid |
| VPP | Virtual Power Plant |
| VVC | Volt-var Curve |
| VVO | Volt-var Optimisation |
| WP | Work Package |
| WPL | Work Package Leader |

# 10. ANNEX Simulation results

## A.1 Simulation results regarding the PF limits for PV technology

The network under study is depicted in Figure 10-1. In this network it is assumed that all RES are PV units and the VVCs are obtained individually for optimizing the objective function (voltage unbalance).

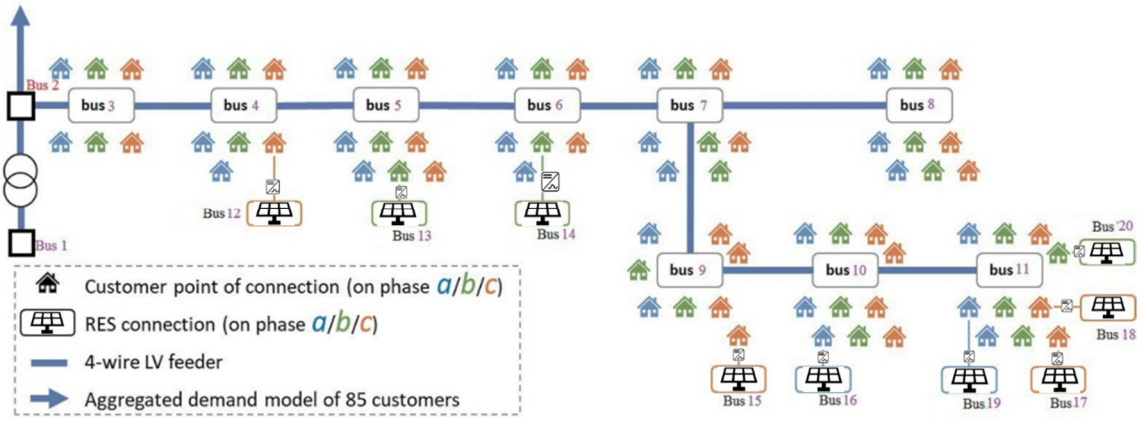


**Figure 10-1 Three phase unbalance network under study**

Several cases have been simulated as follows:

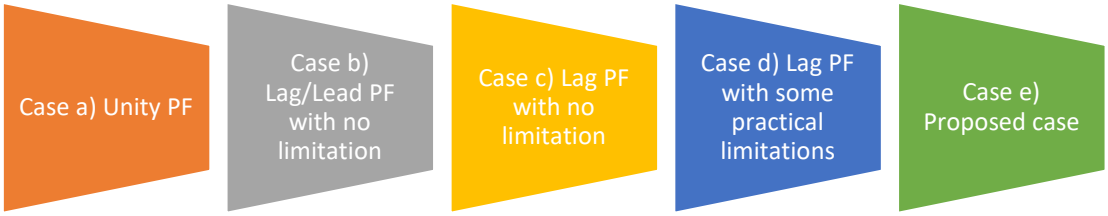


Case a) In this case, it is assumed that the PV units can only provide active power (unity power factor). The average voltage unbalance is calculated equal to 0.018152. The total active losses are 226.9387 kWh. The reactive power capability curve is shown in Figure 10-2.

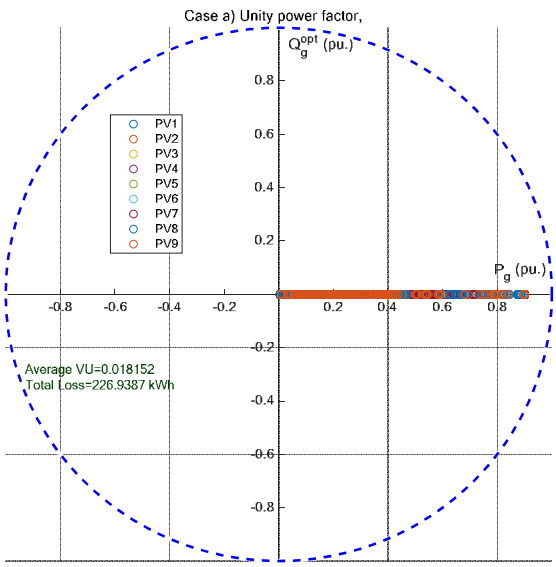


**Figure 10-2 PQ capability curve of PV units with unity power factor**

Case b) In this case, it is assumed that the PV units can provide lag/lead reactive power (with some limitations on the thermal capacity of the inverter). The average voltage unbalance is calculated equal to 0.010667. The total active losses are 245.764 kWh. The reactive power capability curve is shown in Figure 10-3.

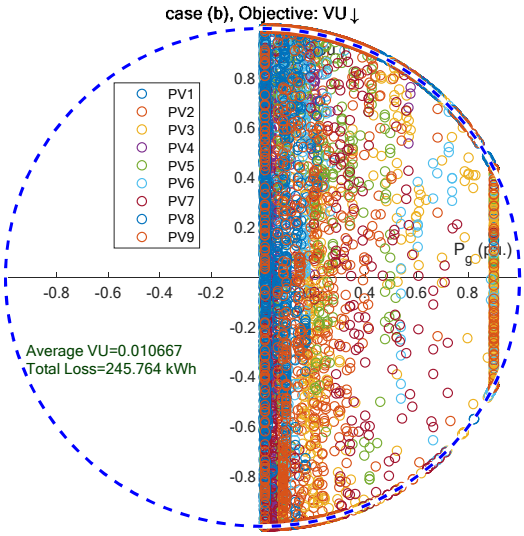


**Figure 10-3 PQ capability curve of PV units with Lag/lead reactive power**

Case c) In this case, it is assumed that the PV units can only provide lag reactive power (with no limitations on the reactive power). The only constraint is satisfying the thermal constraint of the inverter. The average voltage unbalance is calculated equal to 0.012174. The total active losses are 239.8162 kWh. The reactive power capability curve is shown in Figure 10-4.

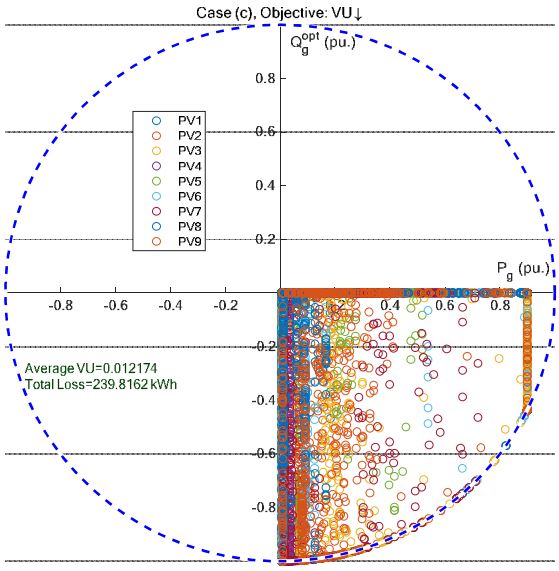


**Figure 10-4 PQ capability curve of PV units with Lag reactive power**

Case D) In this case, it is assumed that the PV units can only provide lag reactive power (with minimum 0.92 power factor). The average voltage unbalance is calculated equal to 0.014333. The total active losses are 229.5192 kWh. The reactive power capability curve is shown in Figure 10-5.

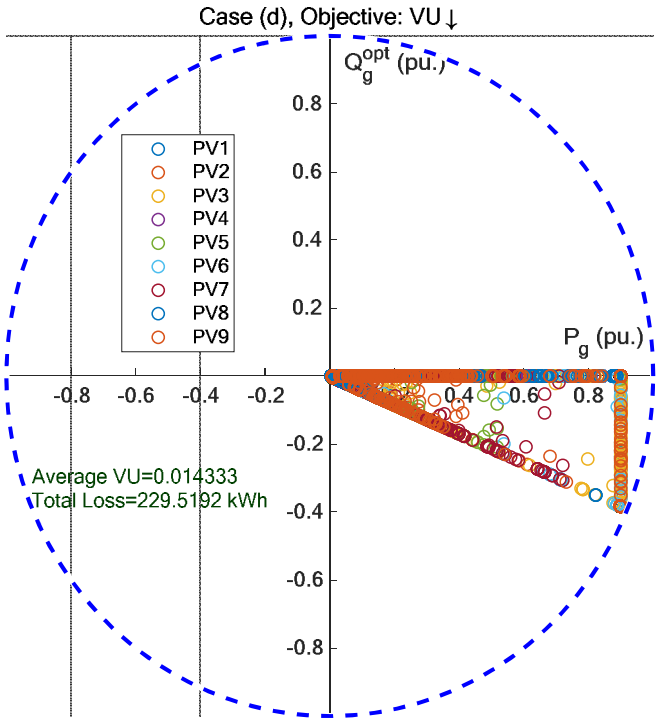


**Figure 10-5 PQ capability curve of PV units with min 0.92 Lag power factor**

Case e) In this case, it is assumed that the PV units can provide lag/lead reactive power (with some operational constraints of the inverter). The average voltage unbalance is calculated equal to 0.01183. The total active losses are 231.3975 kWh. The reactive power capability curve is shown in Figure 10-6.

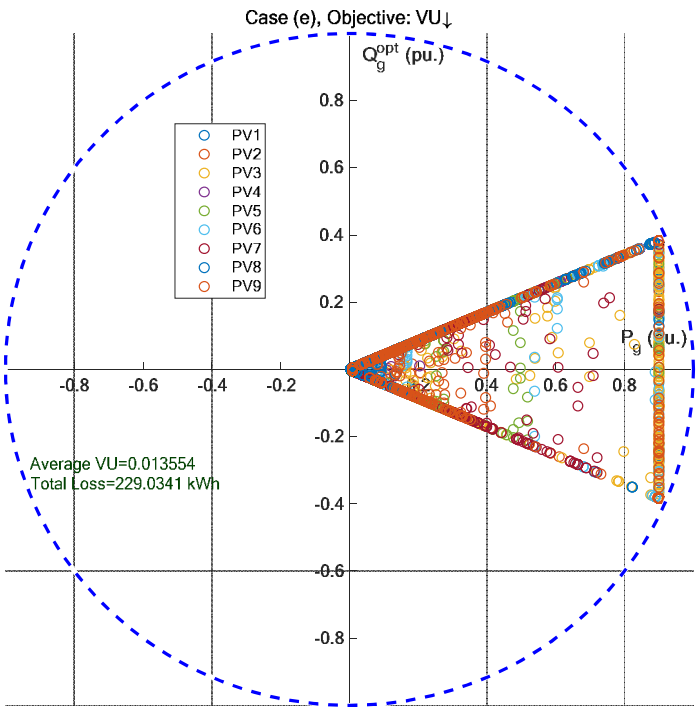


**Figure 10-6 PQ capability curve of PV units with limitations on Lag/lead reactive power**

The reactive power support of PV units in each case study is shown in Figure 10-7.

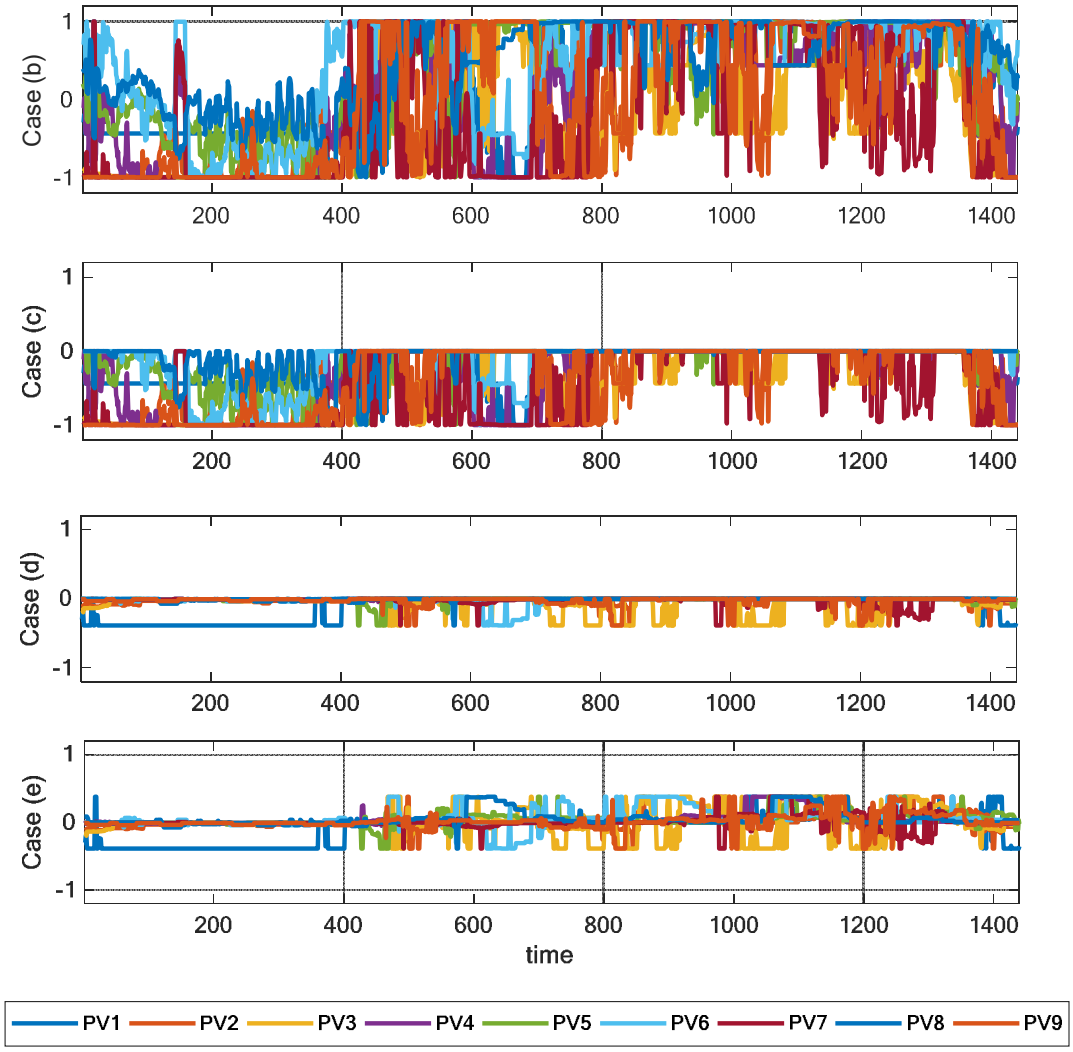


**Figure 10-7 Reactive power support by PV units in each case study**

The impacts of reactive power support of PV units on the network voltage magnitudes in phase **a** are shown in Figure 10-8.

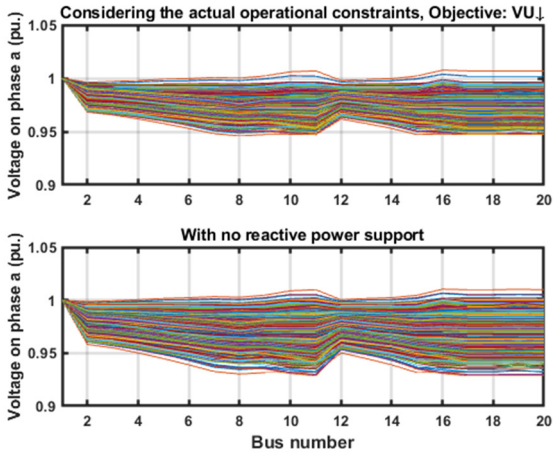


**Figure 10-8 Voltage of phase (a) with/without reactive support of PV units**

The impacts of reactive power support of PV units on the network voltage magnitudes in phase **b** are shown in Figure 10-9.

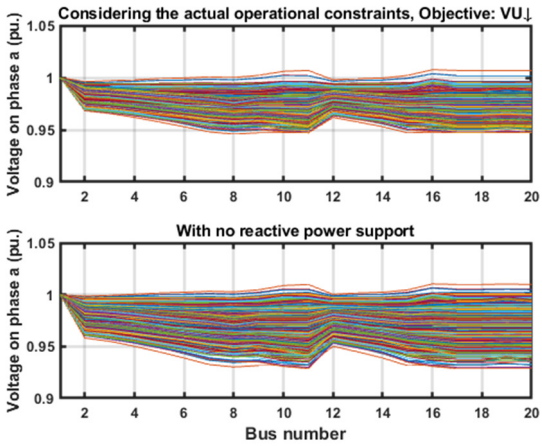


**Figure 10-9 Voltage of phase (b) with/without reactive support of PV units**

The impacts of reactive power support of PV units on the network voltage magnitudes in phase **c** are shown in Figure 10-10.

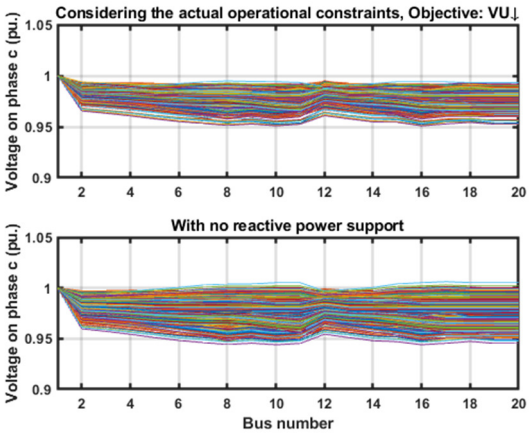


**Figure 10-10 Voltage of phase (c) with/without reactive support of PV units**